duma rent
www.duma-rent.com

STILL

Original instructions

Electric trucks

RX20 14-20
RX20 14-20/Li-ion

CE

6219 6220 6221 6222 6223
6224 6225 6226 6227 6228
6229 6230 6231

56368011501 EN - 04/2019 - 05

first in intralogistics

Address of manufacturer and contact details

STILL GmbH
Berzeliusstraße 10
22113 Hamburg, Germany
Tel. +49 (0) 40 7339-0
Fax: +49 (0) 40 7339-1622
Email: info@still.de
Website: http://www.still.de

Rules for the operating company of industrial trucks

In addition to these operating instructions, a code of practice containing additional information for the operating companies of industrial trucks is also available.

This guide provides information for handling industrial trucks:

- Information on how to select suitable industrial trucks for a particular area of application
- Prerequisites for the safe operation of industrial trucks
- Information on the use of industrial trucks
- Information on transport, initial commissioning and storage of industrial trucks

Internet address and QR code

The information can be accessed at any time by pasting the address **https://m.still.de/vdma** in a web browser or by scanning the QR code.

Table of contents

1 Foreword

Your truck . . . 2
Description of the truck . . . 2
General . . . 5
CE labelling . . . 6
EC declaration of conformity in accordance with Machinery Directive . . . 7
Accessories . . . 8
Labelling points . . . 10
Nameplate . . . 13
Production number . . . 14
StVZO (Road Traffic Licensing Regulations) information . . . 14
Nameplate of a lithium-ion battery . . . 15

Using the truck . . . 15
Commissioning . . . 15
Proper usage . . . 15
Proper use during towing . . . 16
Impermissible use . . . 16
Place of use . . . 17
Parking in temperatures below -10°C . . . 18
Using working platforms . . . 18

Information about the documentation . . . 19
Scope of the documentation . . . 19
Supplementary documentation . . . 20
Issue date and topicality of the operating instructions . . . 21
Copyright and trademark rights . . . 21
Explanation of information symbols used . . . 21
List of abbreviations . . . 22
Definition of directions . . . 24
Schematic views . . . 24

Environmental considerations . . . 26
Packaging . . . 26
Disposal of components and batteries . . . 26

2 Safety

Definition of responsible persons . . . 28
Operating company . . . 28
Specialist . . . 28
Drivers . . . 29

Basic principles for safe operation . . . 31
Insurance cover on company premises . . . 31

Special features when using lithium-ion batteries (variant) . . . 31
Product-specific dangers of the 13.1 kWh & 49 kWh lithium-ion battery . . . 34
Changes and retrofitting . . . 35
Changes to the overhead guard and roof loads . . . 37
Warning regarding non-original parts . . . 38
Damage, defects and misuse of safety systems . . . 38
Tyres . . . 39
Medical equipment . . . 40
Exercise caution when handling gas springs and accumulators . . . 41
Length of the fork arms . . . 41

Residual risk . . . 43
Residual dangers, residual risks . . . 43
Special risks associated with using the truck and attachments . . . 44
Overview of hazards and countermeasures . . . 46
Danger to employees . . . 49

Safety tests . . . 50
Carrying out regular inspections on the truck . . . 50
Insulation testing . . . 50

Safety regulations for handling consumables . . . 52
Permissible consumables . . . 52
Oils . . . 52
Hydraulic fluid . . . 53
Battery acid . . . 54
Disposal of consumables . . . 55

Emissions . . . 56

3 Overviews

Overview . . . 60

Driver's compartment . . . 62

Shelf and cup holder . . . 63

Operating devices and display elements . . . 64
Display/control unit "STILL Easy Control" . . . 64
Lithium-ion battery display . . . 65
Emergency off switch . . . 65
Multi-lever operation . . . 66
Double mini-lever . . . 67
Triple mini-lever . . . 68
Quadruple mini-lever . . . 69
Fingertip . . . 70

Table of contents

Joystick 4Plus . . . 71
Mini-console . . . 72

4 Operation

Checks and tasks before daily use . . . 74
Visual inspections and function checking . . . 74
Climbing into and out of the truck . . . 77
Adjusting the driver's seat . . . 78
Seat belt . . . 83
Adjusting the armrest . . . 86
Adjusting the steering column . . . 87
Unlock the emergency off switch . . . 88
Checking the emergency off function . . . 88
Operating the signal horn . . . 89
Driver's cab . . . 90
Checking the brake system for correct function . . . 92
Checking the steering system for correct function . . . 95
Checking the automatic mast vertical positioning (variant) for correct function . . . 95

Switching on . . . 96
Switching on using the key switch . . . 96
Switching on via push button (variant) . . . 98

Display-operating unit . . . 99
Access authorisation with PIN code (variant) . . . 99
Access authorisation for the fleet manager (variant) . . . 100

Lighting . . . 101
Meaning of the symbols . . . 101
Driving lights . . . 102
Working spotlights . . . 103
Working spotlight for reverse travel (variant) . . . 104
Turn indicators . . . 104
Hazard warning system . . . 105
Rotating beacon . . . 106
STILL SafetyLight (variant) . . . 107

Efficiency and drive modes . . . 108
Blue-Q (variant) . . . 108
Switching Blue-Q on and off . . . 110
STILL Classic and sprint mode . . . 110

Driving . . . 112
Safety regulations when driving . . . 112
Roadways . . . 114

Table of contents

Selecting drive programmes 1 to 3 . . . 118
Selecting drive programme A or B . . . 119
Configuring drive programmes A and B . . . 119
Selecting the drive direction . . . 121
Actuating the drive direction switch, multiple-lever version . . . 122
Actuating the drive direction switch, mini-lever version . . . 122
Actuating the drive direction switch, Fingertip version . . . 123
Actuating the vertical rocker switch for the "drive direction", joystick 4Plus version . . . 123
Actuating the drive direction switch, mini-console version . . . 124
Starting drive mode . . . 124
Starting drive mode, dual pedal version (variant) . . . 126
Operating the service brake . . . 129
Parking brake . . . 130
Applying the mechanical parking brake . . . 130
Actuating the electric parking brake (variant) . . . 132
Malfunctions in the electric parking brake . . . 136
Steering . . . 141
Reducing speed when turning (Curve Speed Control) . . . 142
Speed reduction when the fork carriage is raised (variant) . . . 143
Speed reduction when the cab door is open . . . 143
Speed restriction (variant) . . . 144

Parking . . . 146
Parking the truck securely and switching it off . . . 146
Wheel chock (variant) . . . 148

Lifting . . . 149
Lifting system variants . . . 149
Lift mast versions . . . 149
Operating devices for the lifting system . . . 151
Controlling the lifting system using multi-lever operation . . . 153
Controlling the lifting system using a double mini-lever . . . 155
Controlling the lifting system using a triple mini-lever . . . 157
Controlling the lifting system using a quadruple mini-lever . . . 159
Controlling the lifting system using the Fingertip . . . 161
Controlling the lifting system using the Joystick 4Plus . . . 162
Dynamics of the hydraulic movements . . . 164
Selecting load programs 1 to 3 . . . 165
Changing the fork arms . . . 166
Fork extension (variant) . . . 168
Operation with reversible fork arms (variant) . . . 170
Malfunctions during lifting mode . . . 171
Hydraulic blocking function . . . 172

Table of contents

Handling loads . . . 174
Safety regulations when handing loads . . . 174
Before picking up a load . . . 175
Picking up loads . . . 176
Danger area . . . 177
Transporting pallets . . . 178
Transporting suspended loads . . . 179
Picking up a load . . . 180
Transporting loads . . . 183
Shake function (variant) . . . 184
Setting down a load . . . 188
Driving on ascending and descending gradients . . . 189
Driving on lifts . . . 190
Driving on loading bridges . . . 192

Dynamic load control . . . 193
Reduction of dynamics according to the load weight . . . 193
"Silent Lift" fork wear protection (variant) . . . 193
Lift mast vertical position (variant) . . . 194
Lift mast tilt angle display (variant) . . . 195
Overload protection (variant) . . . 195
Speed reduction when the fork carriage is raised (variant) . . . 195
Load measurement (variant) . . . 196
Tare function (variant) . . . 197
Precision load measurement (variant) . . . 198
Total load (variant) . . . 201

Attachments . . . 204
Fitting attachments . . . 204
Depressurising the hydraulic system . . . 207
General instructions for controlling attachments . . . 212
Controlling attachments using multi-lever operation . . . 214
Controlling attachments using multi-lever operation and the 5th and 6th function . . . 216
Controlling attachments using a double mini-lever . . . 218
Controlling attachments using the double mini-lever and the 5th function . . . 220
Controlling attachments using a triple mini-lever . . . 222
Controlling attachments using the triple mini-lever and the 5th function . . . 223
Controlling attachments using a quadruple mini-lever . . . 225
Controlling attachments using the quadruple mini-lever and the 5th function . . . 227
Controlling attachments using the Fingertip . . . 228
Controlling attachments with Fingertip and the 5th function . . . 230
Controlling attachments using the Joystick 4Plus . . . 232
Controlling attachments with Joystick 4Plus and the 5th function . . . 234

Clamp locking mechanism (variant) . . . 235
Picking up a load using attachments . . . 238

Auxiliary equipment . . . 239
FleetManager (variant) . . . 239
Shock recognition (variant) . . . 239
Driver restraint systems (variants) . . . 239
Actuating the windscreen wipers and windscreen washers (variant) . . . 239
Filling the washer system . . . 242
Operating the rear window heating . . . 242
Ceiling sensor (variant) . . . 243

Cab . . . 249
Opening and closing the cab door . . . 249
Opening and closing the side window . . . 250
Turning the interior lighting on or off (variant) . . . 250
Radio (variant) . . . 251
Heating system (variant) . . . 251
Air conditioning (variant) . . . 254
Clipboard (variant) . . . 255
Sun visor and sun blind . . . 256

Trailer operation . . . 257
Towed load . . . 257
Coupling pin in the counterweight . . . 258
Tow coupling RO*244 . . . 260
Towing trailers . . . 264

Cold store application . . . 265

Display messages . . . 267
Messages . . . 267
Messages about operation . . . 268
Messages about the truck . . . 273

Procedure in emergencies . . . 276
Emergency shutdown . . . 276
Procedure if truck tips over . . . 277
Emergency hammer . . . 278
Emergency lowering . . . 279
Emergency actuation of the electric parking brake (variant) . . . 280
Towing . . . 282

Connecting and disconnecting the battery male connector . . . 285
Connecting the battery male connector . . . 285
Disconnect the battery male connector . . . 286

Table of contents

Handling the lead-acid battery . . . 287
Safety regulations for handling the battery . . . 287
Maintaining the battery . . . 290
Checking the battery condition, acid level and acid density . . . 292
Checking the battery charge status . . . 293
Charging the lead-acid battery . . . 294
Equalising charging to preserve the battery capacity . . . 297

Handling the lithium-ion battery . . . 299
Safety regulations for handling the lithium-ion battery . . . 299
Lithium-ion batteries "GGS Li-ion 48 V (BG2)" 13.1 kWh and 49 kWh . . . 302
Regulations for storing lithium-ion batteries . . . 303
Checking the battery charge status . . . 305
Charging the lithium-ion battery . . . 307

Replacing and transporting the battery . . . 311
General information on replacing the battery . . . 311
Changing to a different battery type . . . 311
Converting to lithium-ion batteries . . . 312
Opening/closing the battery door . . . 313
Special notes for installing the lithium-ion battery . . . 316
Replacing the battery using a truck . . . 316
Replacing the battery using a lift truck and a battery change frame . . . 322
Replacing the battery using a hydraulic battery carrier (variant) . . . 329
Transporting the lead-acid battery by crane . . . 335
Transporting the lithium-ion battery by crane . . . 336

Cleaning the truck . . . 337
Cleaning the truck . . . 337
Cleaning the electrical system . . . 339
Cleaning load chains . . . 340
Cleaning the windows . . . 341
After cleaning . . . 341

Transporting the truck . . . 342
Transport . . . 342
Crane loading . . . 344

Decommissioning . . . 345
Decommissioning and storing the truck . . . 345
Use after storage or decommissioning . . . 347

5 Maintenance

Safety regulations for maintenance . . . 350
General information . . . 350

Table of contents

Working on the hydraulic equipment . . . 350
Working on the electrical equipment . . . 350
Safety devices . . . 351
Set values . . . 351
Lifting and jacking up . . . 351
Working at the front of the truck . . . 352

General maintenance information . . . 353
Personnel qualifications . . . 353
Information for carrying out maintenance . . . 353
Maintenance - 1000 hours/annually . . . 356
Maintenance - 3000 hours/every two years . . . 359
Ordering spare parts and wearing parts . . . 359
Quality and quantity of the required operating materials . . . 359
Lubrication plan . . . 361
Maintenance data table . . . 362

Preserving operational readiness . . . 365
Lubricating the joints and controls . . . 365
Checking the battery interlock and the battery door interlock . . . 366
Maintaining the seat belt . . . 367
Checking the driver's seat . . . 368
Maintaining the heater or air conditioning system . . . 369
Servicing wheels and tyres . . . 371
Servicing the steering axle . . . 372
Checking the battery . . . 373
Replacing the fuses . . . 373
Checking the hydraulic system for leak tightness . . . 373
Checking the hydraulic oil level . . . 376
Lubricating the lift mast and roller track . . . 378
Preserving operational readiness for cold store application . . . 378

1000-hour maintenance/yearly maintenance . . . 379
Other tasks . . . 379
Checking the lift cylinders and connections for leaks . . . 379
Checking the fork arms . . . 380
Checking the reversible fork arms . . . 380
Checking the double pedal . . . 381
Checking the battery changeover frame . . . 381

Table of contents

6 Technical data

Ergonomic dimensions 384
Dimensions 385
VDI datasheet: RX20-14C with steering turntable 387
VDI datasheet: RX20-16 with steering turntable 391
VDI datasheet: RX20-18 and RX20-20 with steering turntable 395
VDI datasheet: RX20-16 with swing axle 400
VDI datasheet: RX20-18 with swing axle 404
RX20-20 swing axle VDI datasheet 408
Battery specifications for lead-acid batteries 412
Battery specifications for lithium-ion batteries 414

1

Foreword

Your truck

Description of the truck

General

The STILL RX20 14-20 is an electrically driven counterbalanced truck with a steering turntable or a rear swing axle. It has a load capacity of up to 2 tonnes with a load centre of gravity of 500 mm. The truck can reach driving speeds of up to 20 km/h without a load.

It is suitable for interior use and for outdoor use.

The driver's compartment has an ergonomic design with the steering column and driver's seat offset to one side.

The "STILL Easy Control" display/operating unit manages all functions that are not called up by the operating devices for the drive functions and hydraulic functions. The driving condition information and all messages are issued via a large colour display. The display/operating unit uses the current battery charge state and the selected drive programme to calculate the remaining available time until the battery has to be recharged and displays this information. It also supports all FleetManager 4.x functions.

Assistance functions "Dynamic Load Control"

The STILL RX20 14-20 can be equipped with assistance functions that make it easier to work with loads.

- Electronic overload protection
- Reduction of the tilt speed of the lift mast according to the load weight
- Reduction of dynamics according to the load weight
- Changes to driving dynamics according to the load and lift height
- Load measurement and precision load measurement
- Lift mast tilt angle display
- Speed reduction when the fork carriage is raised

- Automatic mast vertical positioning
- Fork wear protection

Brake system

The brake system of the truck is comprised of three different brakes:

- Service brake
- Regenerative brake
- Mechanically actuated parking brake
- Electrically actuated parking brake (variant)

The service brake is based on a wear-free, oil-immersed multi-disc brake. This multi-disc brake is used as the service brake for heavy braking or emergency braking with the brake pedal. In the normal working mode, the regenerative brake of the electric traction motors takes effect. The regenerative brake converts the acceleration energy of the truck into electrical energy. This causes the truck to decelerate as soon as the accelerator pedal is released. If the foot is completely removed from the accelerator pedal, the truck brakes until it comes to a standstill. A parking brake ensures that the truck remains securely in place when parked.

Hydraulic system

The steering system, the lift cylinders and the tilt cylinders in the lift mast are supplied with power via a hydraulic pump operated by an electric motor.

The proportional valve technology provides particularly sensitive movements and safe handling of the load. The hydraulic functions can be parameterised individually by the authorised service centre.

Up to three hydraulic circuits can be used to activate attachments (variant). Depending on the equipment, a hydraulic accumulator is also available in the lifting circuit for the purpose of damping pressure peaks in the hydraulic system.

Drive

Both front wheels of the STILL RX20 14-20 are driven by a maintenance-free three-phase drive in the front axle with 48-volt technology.

Lead-acid batteries and lithium-ion batteries that can be replaced from the side are available as a power supply source. In both cases, the trucks can be supplied as a cold store variant.

The driver can help to influence the energy consumption and performance of the truck using the "Blue-Q" efficiency mode, which allows the required setting for each current application to be called up via the display-operating unit.

Steering

The kickback-free, hydraulic rear-wheel steering with "Curve Speed Control" (CSC) ensures driving stability when cornering, allowing the truck to achieve a small turning circle and negotiate narrow aisle widths.

Operation

The multi-lever, the Fingertip mini-lever and the Joystick 4Plus are available as operating devices for the hydraulic functions. These operating devices enable precise operation and smooth control of the lifting speed thanks to directly controlled valves and proportional valve technology.

The acceleration behaviour and braking behaviour can be selected individually using different drive programmes.

For drive mode, the truck features either single-pedal or dual-pedal operation. Acceleration and braking (electric brake) via the accelerator pedal or dual-pedal operation. One pedal for the "forwards" drive direction and one pedal for the "reverse" drive direction. Acceleration and braking behaviour can be individually selected from three different drive programmes.

The "STILL Easy Control" display/operating unit simplifies daily use of the truck by providing personally configurable favourites. The

display/operating unit also monitors the truck functions, including each individual cell in the lithium-ion battery.

General

The truck described in these operating instructions corresponds to the applicable standards and safety regulations.

If the truck is to be operated on public roads, it must conform to the existing national regulations for the country in which it is being used. The driving permit must be obtained from the appropriate office.

The truck has been fitted with state-of-the-art technology. Following these operating instructions will allow the truck to be handled safely. By complying with the specifications in these operating instructions, the functionality and the approved features of the truck will be retained.

Get to know the technology, understand it and use it safely - these operating instructions provide the necessary information and help to avoid accidents and to keep the truck ready for operation beyond the warranty period.

Therefore:

– Before commissioning the truck, read the operating instructions and follow the instructions.

– Always follow all of the safety information contained in the operating instructions and on the truck.

CE labelling

The manufacturer uses CE labelling to indicate that the truck complies with the standards and regulations valid at the time of marketing. This is confirmed by the issued EC declaration of conformity. The CE labelling is attached to the nameplate.

An independent structural change or addition to the truck can compromise safety, thus invalidating the EC declaration of conformity.

The EC declaration of conformity must be carefully stored and made available to the responsible authorities.

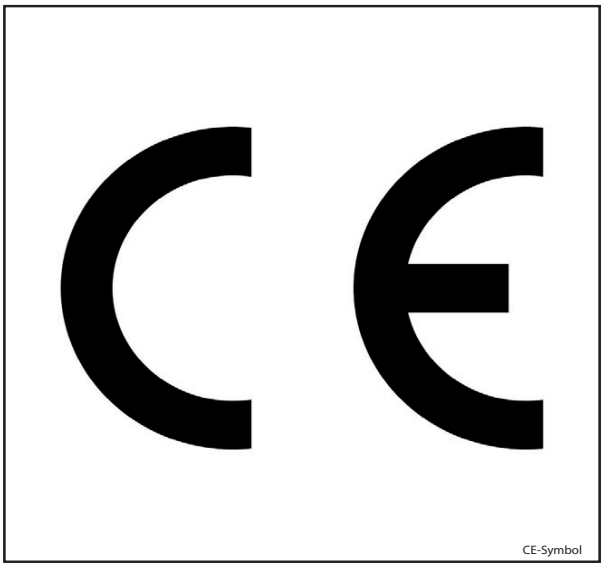

CE-Symbol

EC declaration of conformity in accordance with Machinery Directive

Declaration

STILL GmbH
Berzeliusstraße 10
D-22113 Hamburg Germany

We declare that the

Industrial truck	**according to these operating instructions**
Model	**according to these operating instructions**

conforms to the latest version of the Machinery Directive 2006/42/EC.

Personnel authorised to compile the technical documents:

See EC compliance declaration

STILL GmbH

Accessories

- Key for key switch (two pieces; not for trucks with the "switch on via push button" variant)
- Key for cab (variant)
- Hexagon socket wrench for emergency lowering (in the compartment)
- Battery change frame (not for trucks with the hydraulic battery carrier variant)

Labelling points

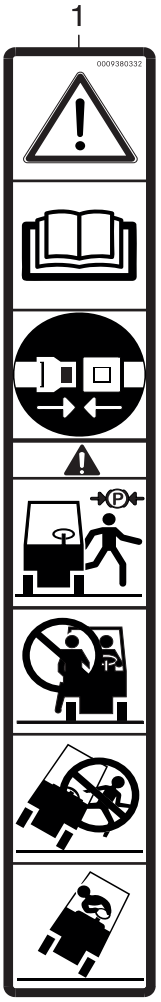

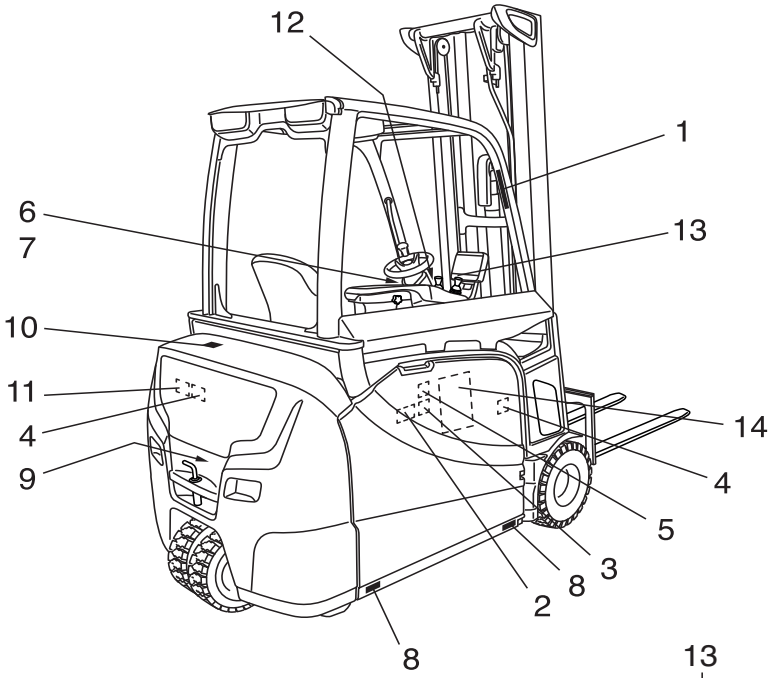

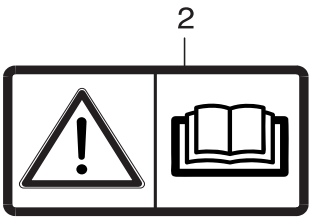

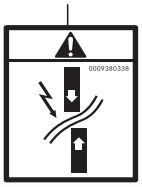

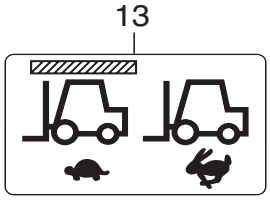

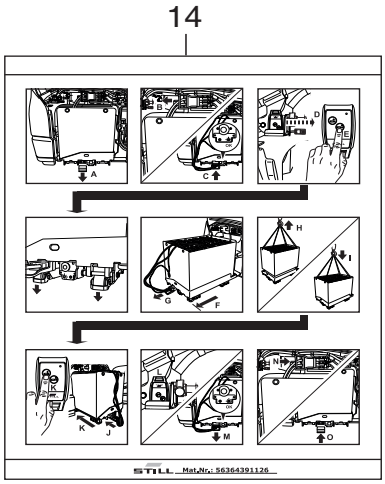

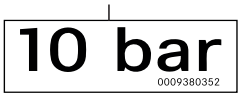

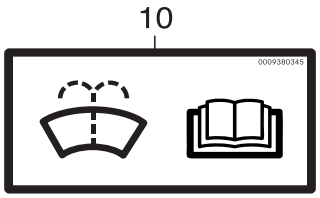

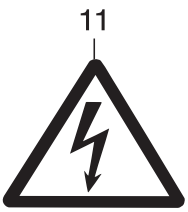

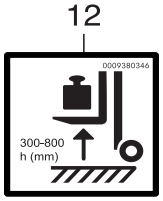

1 Decal information: Caution / Read the operating instructions / Fasten seat belt / Apply parking brake when leaving the truck / Passengers are not allowed / Do not jump off if the truck is tipping over / Lean in the opposite direction to which the truck is tipping
2 Decal information: Caution / Read the operating instructions
3 Warning sign: Risk of short circuit due to shearing
4 Warning sign: Cleaning electrical system parts with water is forbidden
5 Warning sign: Danger due to shearing
6 Decal information: Parking brake applied
7 Decal information: Parking brake released
8 Decal information: Tyre filling pressure
9 Decal information: Lifting gear fixing point
10 Decal information: Washer system filling
11 Warning sign: Dangerous electrical voltage
12 Decal information: Load measurement
13 Decal information: Ceiling sensor
14 Decal information: Battery carrier

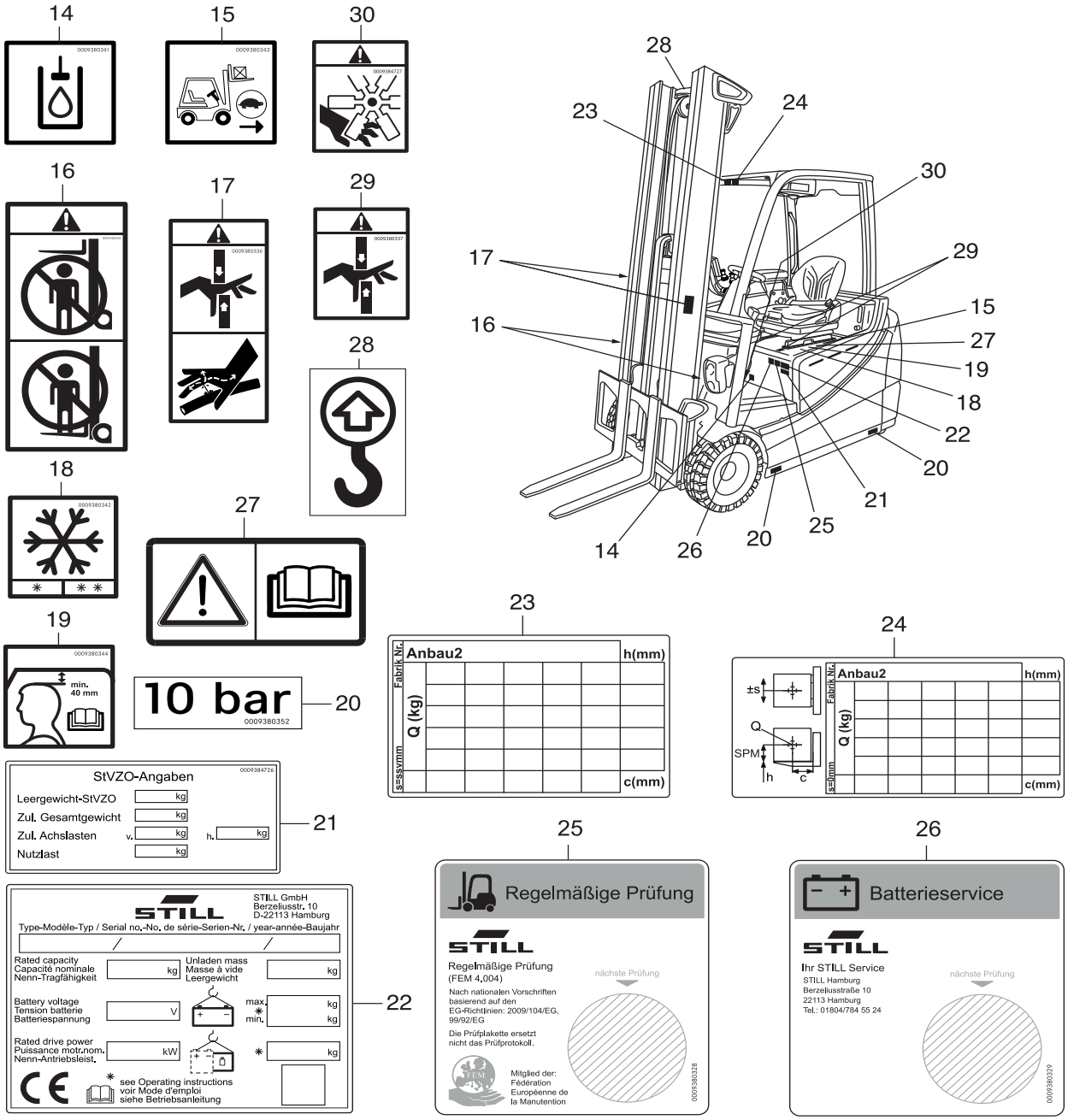
14
15
30
16
17
29
28
18
27
19
min. 40 mm
10 bar
0009380352
20
23
Anbau2
h(mm)
Fabrik Nr.
Q (kg)
s=ssvmm
c(mm)
24
±s
Q
SPM
h
c
s=bmm
StVZO-Angaben
Leergewicht-StVZO
Zul. Gesamtgewicht
Zul. Achslasten
Nutzlast
kg
21
STILL
STILL GmbH
Berzeliusstr. 10
D-22113 Hamburg
Type-Modèle-Typ / Serial no.-No. de série-Serien-Nr. / year-année-Baujahr
Rated capacity
Capacité nominale
Nenn-Tragfähigkeit
Unladen mass
Masse à vide
Leergewicht
Battery voltage
Tension batterie
Batteriespannung
V
max.
min.
Rated drive power
Puissance motr.nom.
Nenn-Antriebsleist.
kW
see Operating instructions
voir Mode d'emploi
siehe Betriebsanleitung
22
25
Regelmäßige Prüfung
STILL
Regelmäßige Prüfung
(FEM 4.004)
Nach nationalen Vorschriften basierend auf den EG-Richtlinien: 2009/104/EG, 99/92/EG
Die Prüfplakette ersetzt nicht das Prüfprotokoll.
nächste Prüfung
Mitglied der: Fédération Européenne de la Manutention
0009380328
26
Batterieservice
STILL
Ihr STILL Service
STILL Hamburg
Berzeliusstraße 10
22113 Hamburg
Tel.: 01804/784 55 24
nächste Prüfung
0009380329

14 Decal information: Hydraulic oil tank
15 Decal information: Speed reduction
16 Warning sign: Do not stand underneath the fork / Do not stand on the fork
17 Warning sign: Danger due to shearing / Danger due to high fluid pressure
18 Decal information: Cold store application (variant)
19 Decal information: Check head clearance
20 Decal information: Tyre filling pressure
21 Decal information: StVZO (German Road Traffic Licensing Regulations) information
22 Nameplate
23 Decal information: Load capacity: Attachment
24 Decal information: Load capacity: Basic table
25 Decal information: Regular testing
26 Decal information: Battery service
27 Decal information: Caution / Read the operating instructions
28 Decal information: Lifting point
29 Warning sign: Danger due to shearing (on rotary seat variant)
30 Warning sign: Fan

Nameplate

The truck can be identified from the information on the nameplate.

1 Type
2 Production number
3 Year of manufacture
4 Tare weight in kilograms
5 Maximum permitted battery weight in kilograms (only for electric trucks)
6 Minimum permitted battery weight in kilograms (only for electric trucks)
7 Ballast weight in kilograms (only for electric trucks)
8 Data matrix code
9 For more detailed information, refer to the technical data in the operating instructions
10 CE labelling
11 Nominal drive power in kilowatts
12 Battery voltage V
13 Rated capacity in kilograms

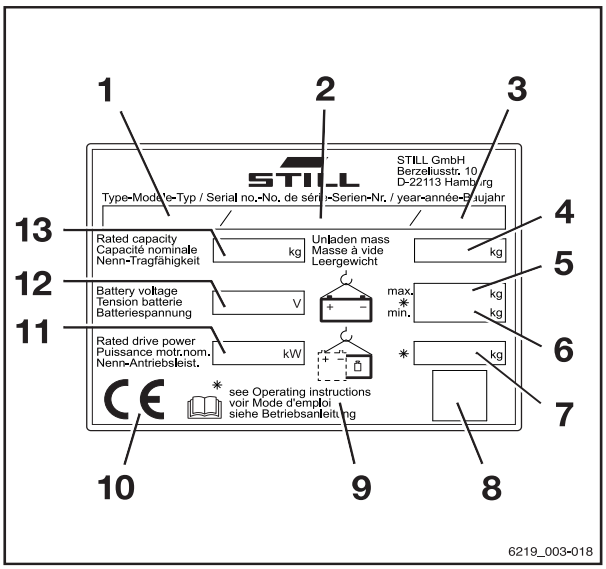

Production number

NOTE

The production number is used to identify the truck. It can be found on the nameplate and must be referred to in all technical questions.

The production number contains the following coded information:

(1) Production location

(2) Model

(3) Year of manufacture

(4) Sequential number

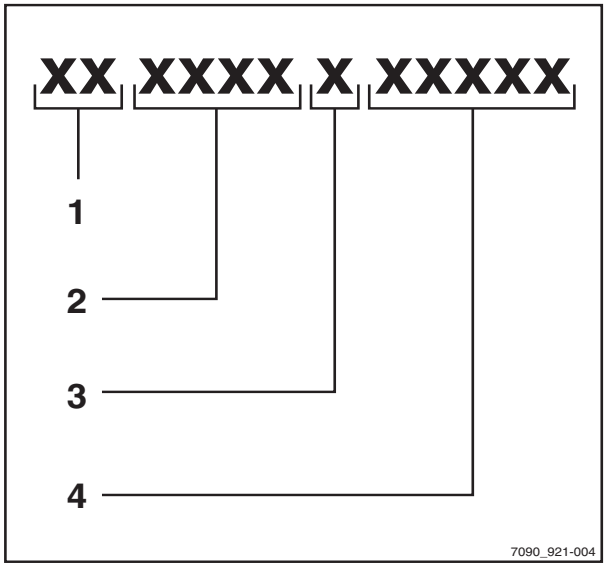

StVZO (Road Traffic Licensing Regulations) information

This label includes information on the weight and load distribution of the truck in kg.

1 Tare weight
2 Total permissible weight
3 Permitted front axle load
4 Permitted rear axle load
5 Payload

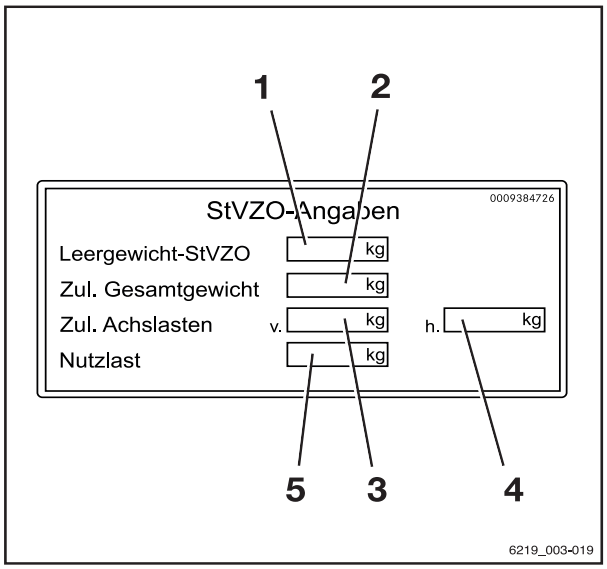

Nameplate of a lithium-ion battery

1 Manufacturer
2 Technology
3 Transportation notes
4 General operating notes
5 Data matrix code for the authorised service centre
6 CE labelling
7 Safety information
8 Data/technical data
9 Address of manufacturer

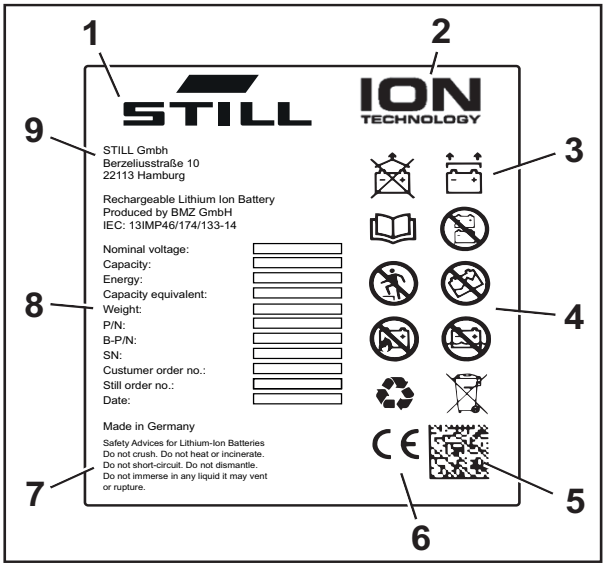

Using the truck

Commissioning

Commissioning is the initial intended use of the truck.

The necessary steps for the commissioning vary depending on the model and equipment of the truck. These steps require preparatory work and adjustment work that cannot be performed by the operating company. See also the chapter entitled "Definition of responsible persons".

– To commission the truck, contact the authorised service centre.

Proper usage

The truck described in these operating instructions is suitable for lifting, transporting and stacking loads.

The truck may only be used for its proper purpose as set out and described in these operating instructions.

If the truck is to be used for purposes other than those specified in the operating instructions, the approval of the manufacturer and, if applicable, the relevant regulatory authorities

must be obtained beforehand to prevent hazards.

The maximum load to be lifted is specified on the capacity rating plate (load diagram) and must not be exceeded; see also the chapter entitled "Before picking up a load".

Proper use during towing

This truck is suitable for the occasional towing of trailers and is equipped with a towing device for this purpose. This occasional towing may not exceed 2% of the daily operating time. If the truck is to be used for towing on a more regular basis, the manufacturer should be consulted.

The regulations regarding trailer operation must be observed; see chapter "Trailer operation".

Impermissible use

The operating company or driver, and not the manufacturer, is liable for any hazards caused by improper use.

NOTE

Please observe the definition of the following responsible persons: "operating company" and "driver".

Use for purposes other than those described in these operating instructions is prohibited.

DANGER

There is a risk of fatal injury from falling off the truck while it is moving!

– It is prohibited to carry passengers on the truck.

The truck may not be operated in areas where there is a risk of fire, explosion or corrosion, or in areas that are particularly dusty.

Stacking or unstacking is not permissible on inclined surfaces or ramps.

Place of use

The truck can be used both outside and in buildings. Operation on public roads is only permitted if the "StVZO" (German Road Traffic Licensing Regulations) equipment variant is installed.

If the truck is to be operated on public roads, the truck must conform to the national regulations for the country in which it is being used.

The ground must have an adequate load capacity (concrete, asphalt) and a rough surface. Roadways, working areas and aisle widths must conform to the specifications in these operating instructions; see the chapter entitled "Roadways".

Driving on upward and downward gradients is permitted provided the specified data and specifications are observed, see the "Routes "chapter.

The truck is suitable for indoor and outdoor use in countries ranging from the Tropics to Nordic regions (temperature range: -20°C to +40°C).

If the truck is to be used in a cold store, it must be configured accordingly and, if necessary, approved for such an environment; see the chapter entitled "Cold store application".

⚠ CAUTION

Batteries can freeze!

If the truck is parked in an ambient temperature of below -10°C for an extended period, the batteries will cool down. The electrolyte may freeze and damage the batteries. The truck is then not ready for operation.

– At ambient temperatures of below -10°C, only park the truck for short periods of time.

The operating company must ensure suitable fire protection for the relevant application in the truck's surroundings. Depending on the application, additional fire protection must be provided on the truck. If in doubt, contact the relevant authorities.

NOTE

Please observe the definition of the following responsible person: "operating company".

Parking in temperatures below -10°C

CAUTION

Batteries can freeze!

If the truck is parked in an ambient temperature below -10°C for an extended period, the batteries will cool down. The electrolyte may freeze and damage the batteries. The truck is then not ready for operation.

– When the ambient temperature is below -10°C, only park the truck for short periods of time.

Using working platforms

WARNING

The use of working platforms is regulated by national law. The use of working platforms is only permitted by virtue of the jurisdiction in the country of use.

– Observe national legislation.
– Before using working platforms, consult the national regulatory authorities.

Information about the documentation

Scope of the documentation

- Original operating instructions of the truck
- Original operating instructions of the display-operating unit
- Operating instructions of the installed variants that are not mentioned in the aforementioned original operating instructions
- "UPA" operating instructions or insert (depending on the truck equipment)
- DVD with the spare parts list of the truck

These operating instructions describe all measures necessary for the safe operation and proper maintenance of the truck in all possible variants available at the time of printing. Special versions to meet customer requirements (UPA) are documented in separate operating instructions. If you have any questions, contact your authorised service centre.

Enter the production number and year of manufacture from the nameplate in the space provided:

Production number	
Year of manufacture	

Please quote the production number in all technical enquiries.

Each truck comes with a set of operating instructions. These instructions must be stored carefully and must be available to the driver and operating company at all times. The storage location is specified in the section entitled "Overview of the driver's compartment".

If the operating instructions are lost, the operating company must obtain a replacement from the manufacturer immediately.

The operating instructions are included in the spare parts list and can be reordered as a spare part.

The personnel responsible for operating and maintaining the equipment must be familiar with these operating instructions.

The operating company must ensure that all users have received, read and understood these operating instructions.

Safely store the complete documentation and pass on to the subsequent operating company when transferring or selling the truck.

NOTE

Please note the definition of the following responsible persons: "operating company" and "driver".

Thank you for reading and complying with these operating instructions. If you have any questions or suggestions for improvements, or if you have found any errors, please contact the authorised service centre.

Supplementary documentation

This industrial truck can be fitted with unplanned equipment (**UPA**) that deviates from the standard equipment and/or the variants.

The UPA may be, for example:

- Special sensors
- Special attachments
- Towing devices
- Customised attachments

In this case, the industrial truck has additional documentation. This may be in the form of an insert or separate operating instructions.

The original operating instructions for this industrial truck are valid for the operation of standard equipment and variants without restriction. The operational and safety information in the original operating instructions continues to be valid in its entirety unless it is countermanded in this additional documentation.

The requirements for the qualification of personnel as well as the time for maintenance may vary. This is defined in the additional documentation.

– If you have any questions, please contact your authorised service centre.

Issue date and topicality of the operating instructions

The issue date and the version of these operating instructions can be found on the title page.

STILL is constantly engaged in the further development of trucks. These operating instructions are subject to change, and any claims based on the information and/or illustrations contained in them cannot be asserted.

Please contact your authorised service centre for technical support relating to your truck.

Copyright and trademark rights

These instructions must not be reproduced, translated or made accessible to third parties—including as excerpts—except with the express written approval of the manufacturer.

Explanation of information symbols used

⚠ DANGER

Indicates procedures that must be strictly adhered to in order to prevent the risk of fatalities.

⚠ WARNING

Indicates procedures that must be strictly adhered to in order to prevent the risk of injuries.

⚠ CAUTION

Indicates procedures that must be strictly adhered to in order to prevent material damage and/or destruction.

NOTE

For technical requirements that require special attention.

ENVIRONMENT NOTE

To prevent environmental damage.

List of abbreviations

NOTE

This list of abbreviations applies to all types of operating instructions. Not all of the abbreviations that are listed here will necessarily appear in these operating instructions.

Abbreviation	Meaning	Explanation
ABE	Display operating unit	
ArbSchG	Arbeitsschutzgesetz	German implementation of EU occupational health and safety directives
Betr-SichV	Betriebssicherheitsverordnung	German implementation of the EU working equipment directive
BG	Berufsgenossenschaft	German insurance company for the company and employees
BGG	Berufsgenossenschaftlicher Grundsatz	German principles and test specifications for occupational health and safety
BGR	Berufsgenossenschaftliche Regel	German rules and recommendations for occupational health and safety
DGUV	Berufsgenossenschaftliche Vorschrift	German accident prevention regulations
CE	Communauté Européenne	Confirms conformity with product-specific European directives (CE mark)
CEE	Commission on the Rules for the Approval of the Electrical Equipment	International commission on the rules for the approval of electrical equipment
DC	Direct Current	Direct current
DFÜ	Datenfernübertragung	Remote data transmission
DIN	Deutsches Institut für Normung	German standardisation organisation
EG	European Community	
EN	European standard	
FEM	Fédération Européene de la Manutention	European Federation of Materials Handling and Storage Equipment
F_{max}	maximum Force	Maximum power
GAA	Gewerbeaufsichtsamt	German authority for monitoring/issuing regulations for worker protection, environmental protection, and consumer protection

Abbreviation	Meaning	Explanation
GPRS	General Packet Radio Service	Transfer of data packets in wireless networks
ID no.	ID number	
ISO	International Organization for Standardization	International standardisation organisation
LAN	Local Area Network	Local area network
K_{pA}	Uncertainty of measurement of sound pressure levels	
LED	Light Emitting Diode	Light emitting diode
L_p	Sound pressure level at the workplace	
L_{pAZ}	Average continuous sound pressure level in the driver's compartment	
LSP	Load centre of gravity	Distance of the centre of gravity of the load from the front face of the fork backs
MAK	Maximum workplace concentration	Maximum permissible air concentrations of a substance at the workplace
Max.	Maximum	Highest value of an amount
Min.	Minimum	Lowest value of an amount
PIN	Personal Identification Number	Personal identification number
PPE	Personal protective equipment	
SE	Super-Elastic	Superelastic tyres (solid rubber tyres)
SIT	Snap-In Tyre	Tyres for simplified assembly, without loose rim parts
StVZO	Straßenverkehrs-Zulassungs-Ordnung	German regulations for approval of vehicles on public roads
TRGS	Technische Regel für Gefahrstoffe	Ordinance on hazardous materials applicable in the Federal Republic of Germany
VDE	Verband der Elektrotechnik Elektronik Informationstechnik	German technical/scientific association
VDI	Verein Deutscher Ingenieure	German technical/scientific association
VDMA	Verband Deutscher Maschinen- und Anlagenbau e.V.	German Mechanical Engineering Industry Association
WLAN	Wireless LAN	Wireless local area network

Definition of directions

The directions "forwards" (1), "backwards" (3), "right" (2) and "left" (4) refer to the installation position of the parts as seen from the driver's compartment; the load is to the front.

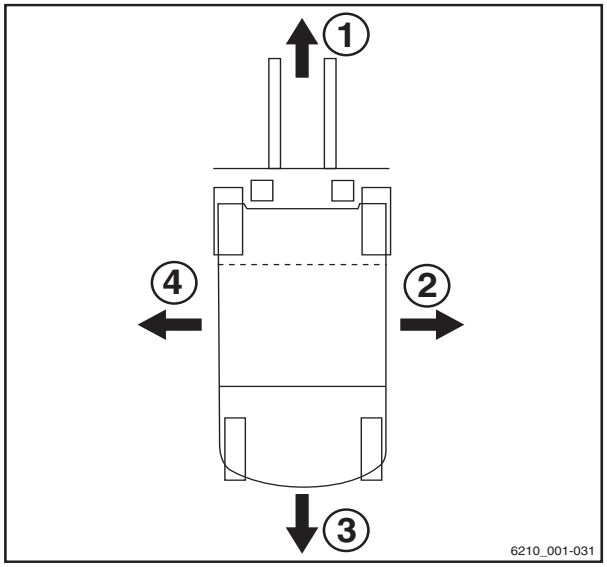

Schematic views

View of functions and operating procedures

At many points in this documentation, the (mostly sequential) operation of certain functions or operating procedures is explained. Schematic diagrams of a counterbalance truck are used to illustrate these procedures.

NOTE

These schematic views are not representative of the structural state of the documented truck. The views are used solely for the purpose of clarifying procedures.

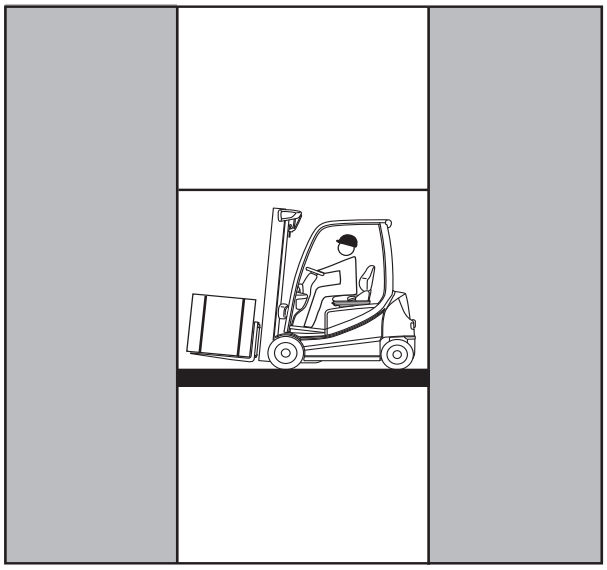

View of the display-operating unit

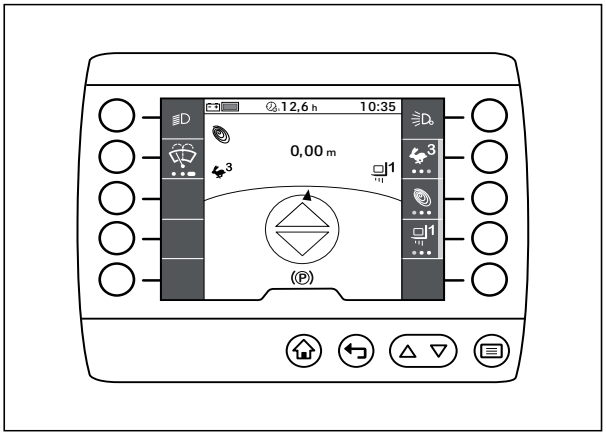

NOTE

Views of operating statuses and values in the display of the display and operating unit are examples and partly dependent on the truck equipment. As a result, the displays shown of the actual operating statuses and values may vary.

Environmental considerations

Packaging

During delivery of the truck, certain parts are packaged to provide protection during transport. This packaging must be removed completely prior to initial start-up.

ENVIRONMENT NOTE

The packaging material must be disposed of properly after delivery of the truck.

Disposal of components and batteries

The truck is composed of different materials. If components or batteries need to be replaced and disposed of, they must be:

- disposed of,
- treated or
- recycled in accordance with regional and national regulations.

NOTE

The documentation provided by the battery manufacturer must be observed when disposing of batteries.

ENVIRONMENT NOTE

We recommend working with a waste management company for disposal purposes.

2

Safety

Definition of responsible persons

Operating company

The operating company is the natural or legal person or group who operates the truck or on whose authority the truck is used.

The operating company must ensure that the truck is only used for its proper purpose and in compliance with the safety regulations set out in these operating instructions.

The operating company must ensure that all users read and understand the safety information.

The operating company is responsible for the scheduling and correct performance of regular safety checks.

We recommend that the national performance specifications are adhered to.

Specialist

A qualified person is defined as a service engineer or a person who fulfils the following requirements:

- A completed vocational qualification that demonstrably proves their professional expertise. This proof should consist of a vocational qualification or a similar document.
- Professional experience indicating that the qualified person has gained practical experience of industrial trucks over a proven period during their career During this time, this person has become familiar with a wide range of symptoms that require checks to be carried out, such as based on the results of a hazard assessment or a daily inspection
- Recent professional involvement in the field of the industrial truck test in question and an appropriate further qualification are essential. The qualified person must have experience of carrying out the test in question or of carrying out similar tests. Moreover, this person must be aware of the latest technological developments

regarding the industrial truck to be tested and the risk being assessed

Drivers

This truck may only be driven by suitable persons who are at least 18 years of age, have been trained in driving, have demonstrated their skills in driving and handling loads to the operating company or an authorised representative, and have been specifically instructed to drive the truck. Specific knowledge of the truck to be operated is also required.

The training requirements under §3 of the Health and Safety at Work Act and §9 of the plant safety regulations are deemed to have been satisfied if the driver has been trained in accordance with BGG (General Employers' Liability Insurance Association Act) 925. Observe the national regulations for your country.

Driver rights, duties and rules of behaviour

The driver must be trained in his rights and duties.

The driver must be granted the required rights.

The driver must wear protective equipment (protection suit, safety footwear, safety helmet, industrial goggles and gloves) that is appropriate for the conditions, the job and the load to be lifted. Solid footwear should be worn to ensure safe driving and braking.

The driver must be familiar with the operating instructions and have access to them at all times.

The driver must:

- have read and understood the operating manual
- have familiarised himself with safe operation of the truck
- be physically and mentally able to drive the truck safely

DANGER

The use of drugs, alcohol or medications that affect reactions impair the ability to drive the truck!

Individuals under the influence of the aforementioned substances are not permitted to perform work of any kind on or with the truck.

Prohibition of use by unauthorised persons

The driver is responsible for the truck during working hours. He must not allow unauthorised persons to operate the truck.

When leaving the truck, the driver must secure it against unauthorised use, e.g. by pulling out the key.

Basic principles for safe operation

Insurance cover on company premises

In many cases, company premises are restricted public traffic areas.

NOTE

The business liability insurance should be reviewed to ensure that, in the event of any damage caused in restricted public traffic areas, there is insurance cover for the truck in respect of third parties.

Special features when using lithium-ion batteries (variant)

The following special features apply for the operating company and drivers when this truck is equipped with a lithium-ion battery (variant) in place of a conventional lead-acid battery.

DANGER

Risk of explosion!

Heating to over 80°C, mechanical stress and incorrect use may lead to the battery exploding.

- Never heat the battery to over 80°C or expose it to naked flames.
- Do not subject the battery to excessive mechanical loads.
- Do not climb on the battery.
- Avoid impacts.
- Do not open the battery.
- Never short-circuit the battery connectors.
- Do not connect the battery with the polarity reversed.

Permissible lithium-ion batteries

– Use only lithium-ion batteries that have been approved by STILL for use with this truck.

Declaring the use of lithium-ion batteries

We recommend that the operating company informs the local fire brigade of the planned use of trucks fitted with lithium-ion batteries.

The health and safety representative and the workforce must also be informed that trucks with lithium-ion batteries are being used.

Hazard assessment

In accordance with §3 of the German Ordinance on Industrial Safety and Health (BetrSichV), the operating company is obliged to perform a separate hazard assessment in order to assess the risks posed to the company by lithium-ion batteries.

– Observe the national regulations for the country in which the truck is being used.

Driver qualification

In addition to the prerequisites set out in the chapter entitled "Definition of responsible persons", in the section entitled "Driver", please observe the following:

- The driver must be instructed in how to operate the lithium-ion battery.
- Only instructed drivers may drive these trucks.

Procedure in the event of a fire

Damaged lithium-ion batteries pose an increased fire hazard. In the event of a fire, large quantities of water are the best option to cool the battery.

– Evacuate the location of the fire as quickly as possible.

– Ventilate the location of the fire well, as the resulting combustion gases are corrosive if inhaled.

- Inform the fire brigade that lithium-ion batteries are affected by the fire.
- Observe the information provided by the battery manufacturer regarding the procedure in the event of a fire.

Water can be used to cool down an incipient fire.

Transport

In certain circumstances, transporting the lithium-ion battery outside the premises may require a special transport container.

- Contact the authorised service centre for more information.

Product-specific dangers of the 13.1 kWh & 49 kWh lithium-ion battery

WARNING

Risk of burns due to hot surfaces!

The battery has an integrated brake resistor that can heat up to over 100°C during operation.

It can take several hours for the brake resistor to cool down to a temperature at which it poses no risk.

– Do not touch the hot area (1).

WARNING

Risk of injury!

If the safety valve (2) trips, there is a risk of injury!

– Exit the area around the battery immediately, retreating to a minimum distance of 5 m.

NOTE

The brake resistor (1) is installed differently depending on the battery group. The build-up of heat in the area around the brake resistor is harmless. The safety valve (2) opens when the battery is subjected to over pressure or catches fire.

All lithium-ion batteries are essentially associated with the risk of a fire starting, of the battery exploding and of the battery causing chemical burns.

If the batteries are used properly, no hazardous substances escape from the closed tray. No contact with toxic substances is possible. There is a risk of contact only in the event of incorrect use (mechanical, thermal, electrical) that leads to activation of the safety valve (2) or to the housing cracking. As a result, the electrolyte fluid may leak out, the electrode material may react with moisture/water or battery discharge/a fire/or an explosion can occur, depending on the surrounding circumstances.

Touching live components can cause an electric shock, which can have thermal or

▷

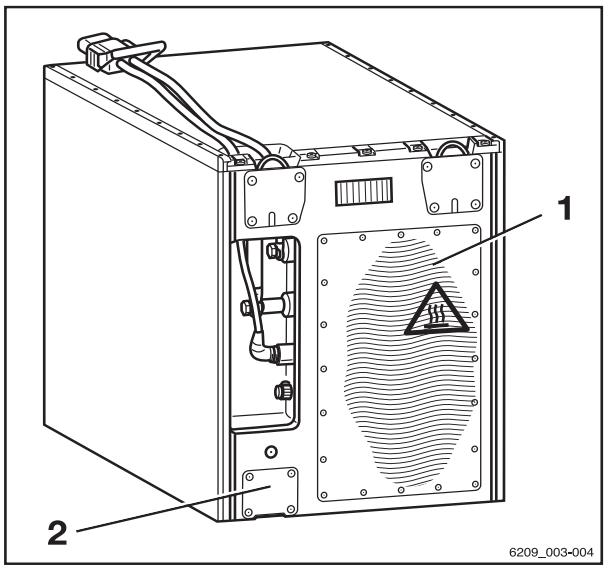

paralysing effects. The latter can cause ventricular fibrillation, cardiac arrest or respiratory paralysis, leading to death.

If a battery combusts, the resulting smoke or vapours can cause irritation of the eyes, skin and respiratory system.

Changes and retrofitting

If the truck will be used for work that is not listed in the directives or in these instructions, convert or retrofit the truck for this purpose as required. Any structural modification can impair the handling and stability of the truck, and can result in accidents.

Any modifications that adversely affect the stability, the load capacity or the circumferential view of the truck require written approval from the manufacturer.

The following components may only be modified with prior written approval from the manufacturer:

- Brakes
- Steering
- Operating devices
- Safety systems
- Equipment variants
- Attachments

The truck may only be converted with written approval from the manufacturer. If necessary, obtain approval from the relevant authorities.

We warn against the installation and use of restraint systems not approved by the manufacturer.

– Contact the authorised service centre before converting or retrofitting the truck.

DANGER

Risk of injury if truck tips over!

Even if an approved restraint system is in use, there is still a residual risk that the driver could be injured if the truck tips over. The risk of injury can be reduced by using the restraint system in conjunction with the seat belt. In addition, the seat belt protects against the consequences of rear-end collisions and falling off ramps.

– Use the seat belt too.

Only the authorised service centre is permitted to perform welding work on the truck.

DANGER

Risk of explosion from additional bores in the battery hood!

Explosive gases can escape and can lead to potentially fatal injuries if they explode. Sealing bores with plugs is not sufficient to prevent gas from escaping.

– Do not drill any holes in the battery hood.

DANGER

Risk of accident from additional holes in the battery hood!

The rigidity of the battery hood is impaired and the battery hood can break. The driver's seat may collapse into the battery hood, which could cause the driver to perform uncontrolled steering and driving manoeuvres.

– Do not drill any holes in the battery hood.

DANGER

Risk to life from falling load!

There is a risk to the driver's life if the truck is not equipped with an overhead guard, as the driver may be struck by a load falling from a lift height of 1800 mm or greater.

Operation of the truck without an overhead guard is prohibited at a lift height greater than 1800 mm.

– At lift heights of 1800 mm and above, only use the truck in conjunction with an overhead guard.

The operating company is only permitted to make modifications to the truck independently

if the manufacturer goes into liquidation and the company is not taken over by another legal person.

The operating company must also fulfil the following prerequisites:

- Design documents, test documents and assembly instructions associated with the modification must be permanently archived and remain accessible at all times.
- The capacity rating plate, the decal information, the hazard warnings and the operating instructions must be checked to ensure that they are consistent with the modifications and must be amended if required.
- Modifications must be designed, checked and implemented by a design office that specialises in industrial trucks. The design office must comply with the standards and directives valid at the time that modifications are made.

Decal information with the following data must be permanently affixed to the truck so that it is clearly visible:

- Type of modification
- Date of modification
- Name and address of the company that carried out the modification

Changes to the overhead guard and roof loads

⚠ DANGER

In the event of the overhead guard failing due to a falling load or the truck tipping over, there are potentially fatal consequences for the driver. There is a risk to life!

Welding and drilling on the overhead guard changes the material characteristics and the structural design of the overhead guard. Excessive forces caused by falling loads or the truck tipping over may result in buckling of the modified overhead guard and no protection for the driver.

– Do not perform welding on the overhead guard.
– Do not perform drilling on the overhead guard.

⚠ CAUTION

Heavy roof loads damage the overhead guard!

To ensure the stability of the overhead guard at all times, a roof load may only be mounted on the overhead guard if the structural design has been tested and the manufacturer has given approval.

– Seek advice from the authorised service centre for the mounting of roof loads.

Warning regarding non-original parts

Original parts, attachments and accessories are specially designed for this truck. We specifically draw your attention to the fact that parts, attachments and accessories supplied by other companies have not been tested and approved by STILL.

⚠ CAUTION

Installation and/or use of such products may therefore have a negative impact on the design features of the truck and thus impair active and/or passive driving safety.

We recommend that you obtain approval from the manufacturer and, if necessary, from the relevant regulatory authorities before installing such parts. The manufacturer accepts no liability for any damage caused by the use of non-original parts and accessories without approval.

Damage, defects and misuse of safety systems

Damage or other defects on the truck or attachment must be reported to the supervisor or responsible fleet manager immediately so that they can have the defect rectified.

Trucks and attachments that are not functional or safe to drive may not be used until they have been properly repaired.

Do not remove or deactivate safety systems and switches.

Fixed set values may only be changed with the approval of the manufacturer.

Work on the electrical system (e.g. connecting a radio, additional headlights etc.) is only

permitted with the manufacturer's written approval. All electrical system interventions must be documented.

Even if they are removable, roof panels may not be removed, as they are designed to protect against small falling objects.

Tyres

DANGER

Risk to stability!

Failure to observe the following information and instructions can lead to a loss of stability. The truck may tip over, risk of accident!

The following factors can lead to a loss of stability and are therefore **prohibited**:

- Different tyres on the same axle, e.g. pneumatic tyres and superelastic tyres
- Tyres not approved by the manufacturer
- Excessive tyre wear
- Tyres of inferior quality
- Changing rim wheel parts
- Combining rim wheel parts from different manufacturers

The following rules must be observed to ensure stability:

- Only use tyres with equal and permitted levels of wear on the same axle
- Only use wheels and tyres of the same type on the same axle, e.g. only superelastic tyres
- Only use wheels and tyres approved by the manufacturer
- Only use high-quality products

Wheels and tyres approved by the manufacturer can be found on the spare parts list. If other wheels or tyres are to be used, authorisation from the manufacturer must be obtained beforehand.

– Contact the authorised service centre on this matter.

When changing wheels or tyres, always ensure that this does not cause the truck to

tilt to one side (e.g. always replace right-hand and left-hand wheels at the same time). Changes must only be made following consultation with the manufacturer.

If the type of tyre used on an axle is changed, for example from superelastic tyres to pneumatic tyres, the load diagram must be changed accordingly.

– Contact the authorised service centre on this matter.

Medical equipment

⚠ WARNING

Electromagnetic interference may occur on medical devices!

Only use equipment that is sufficiently protected against electromagnetic interference.

Medical equipment, such as pacemakers or hearing aids, may not work properly when the truck is in operation.

– Ask your doctor or the manufacturer of the medical equipment to confirm that the medical equipment is sufficiently protected against electromagnetic interference.

Exercise caution when handling gas springs and accumulators

⚠ WARNING

Gas springs are under high pressure. Improper removal results in an elevated risk of injury.

For ease of operation, various functions on the truck can be supported by gas springs. Gas springs are complex components that are subject to high internal pressures (up to 300 bar). They may under no circumstances be opened unless instructed to do so, and may be installed only when not under pressure. If required, the authorised service centre will depressurise the gas spring in accordance with the regulations before removal. Gas springs must be depressurised before recycling.

– Avoid damage, lateral forces, buckling, temperatures over 80°C and heavy contamination.
– Damaged or defective gas springs must be changed immediately.
– Contact the authorised service centre.

⚠ WARNING

Accumulators are under high pressure. Improper installation of an accumulator results in an elevated risk of injury.

Before starting work on the accumulator it must be depressurised.

– Contact the authorised service centre.

Length of the fork arms

⚠ DANGER

Risk of accident due to the incorrect selection of fork arms!

– The fork arms must match the depth of the load.

If the fork arms are too short, the load may fall off the arms after it has been picked up. In addition, be aware that the load centre of gravity may shift as a result of dynamic forces, such as braking. A load that is otherwise resting safely on the fork arms may move forwards and fall.

If the fork arms are too long, they can catch on loading units behind the load that is to be

picked up. These other loading units then fall over when the load is raised.

– For help with selecting the correct fork arms, contact the authorised service centre.

Residual risk

Residual dangers, residual risks

Despite careful working and compliance with standards and regulations, the occurrence of other risks when using the truck cannot be entirely excluded.

The truck and all other system components comply with current safety requirements. Nevertheless, even when the truck is used for its proper purpose and all instructions are followed, some residual risk cannot be excluded.

Even beyond the narrow danger areas of the truck itself, a residual risk cannot be excluded. Persons in this area around the truck must exercise a heightened degree of awareness, so that they can react immediately in the event of any malfunction, incident or breakdown etc.

⚠ WARNING

All persons that are in the vicinity of the truck must be instructed regarding these risks that arise through use of the truck.

In addition, we draw attention to the safety regulations in these operating instructions.

Risks can include:

- Escape of consumables due to leakages, rupture of lines and containers etc.
- Risk of accident when driving over difficult ground such as gradients, smooth or irregular surfaces, or with poor visibility etc.
- Falling, tripping etc. when moving on the truck, especially in wet weather, with leaking consumables or on icy surfaces
- Fire and explosion risks due to batteries and electrical voltages
- Human error resulting from failure to observe the safety regulations,
- Unrepaired damage or defective and worn components,
- Insufficient maintenance and testing
- Use of incorrect consumables
- Exceeding test intervals

The manufacturer is not held responsible for accidents involving the truck caused by the failure of the operating company to comply with these regulations either intentionally or carelessly.

Stability

The stability of the truck has been tested to the latest technological standards and is guaranteed provided that the truck is used properly and according to its intended purpose. These standards only take into account the dynamic and static tipping forces that can arise during specified use in accordance with the operating rules and intended purpose. However, the danger of exceeding the moment of tilt due to improper use or incorrect operation and losing stability can never be excluded.

The loss of stability can be avoided or minimised by the following actions:

- Always secure the load against slipping, e.g. by lashing.
- Always transport unstable loads in suitable containers.
- Always drive slowly when cornering.
- Drive with the load lowered.
- Even with sideshifts, align the load as centrally as possible with the truck and transport in this position.
- Avoid turning and diagonally driving across slopes or gradients.
- Never have the load facing downhill when travelling on slopes or gradients.
- Pick up only loads of the approved width.
- Always take great care when transporting suspended loads.
- Do not drive over ramp edges or steps.

Special risks associated with using the truck and attachments

Approval from the manufacturer and attachment manufacturer must be obtained each

time the truck is used in a manner that falls outside the scope of normal use, and in cases where the driver is not certain that he can use the truck correctly and without the risk of accidents.

Overview of hazards and counter-measures

NOTE

This table is intended to help evaluate the hazards in your facility and applies to all drive types. It does not claim to be complete.

– Observe the national regulations for the country in which the truck is being used.

Hazard	Measure	Check note √ Complete - Not applicable	Notes
Truck equipment does not comply with local regulations	Test	O	If in doubt, consult competent factory inspectorate or employers' liability insurance association
Lack of skills and qualification of driver	Driver training (sit-on and stand-on)	O	BGG 925 VDI 3313 driver permit
Usage by unauthorised persons	Access with key only for authorised persons	O	
Truck not in a safe condition	Recurrent testing and rectification of defects	O	German Ordinance on Industrial Safety and Health (BetrSichV)
Risk of falling when using working platforms	Compliance with national regulations (different national laws)	O	German Ordinance on Industrial Safety and Health (BetrSichV) and employer's liability insurance associations
Impaired visibility due to load	Resource planning	O	German Ordinance on Industrial Safety and Health (BetrSichV)
Contamination of respiratory air	Assessment of diesel exhaust gases	O	Technical Regulations for Hazardous Substances (TRGS) 554 and the German Ordinance on Industrial Safety and Health (BetrSichV)
	Assessment of LPG exhaust gases	O	German threshold limit values list (MAK-Liste) and the German Ordinance on Industrial Safety and Health (BetrSichV)

Hazard	Measure	Check note √ Complete - Not applicable	Notes
Impermissible usage (improper usage)	Issuing of operating instructions	O	German Ordinance on Industrial Safety and Health (BetrSichV) and German Health and labour protection law (ArbSchG)
	Written notice of instruction to driver	O	German Ordinance on Industrial Safety and Health (BetrSichV) and German Health and labour protection law (ArbSchG)
	Note the German Ordinance on Industrial Safety and Health (BetrSichV), the operating instructions and the German Engineering Federation (VDMA) rules	O	
When fuelling			
a) Diesel	Note the German Ordinance on Industrial Safety and Health (BetrSichV), the operating instructions and the German Engineering Federation (VDMA) rules	O	
b) LPG	Note German Social Accident Insurance (DGUV) regulation D34, the operating instructions and the German Engineering Federation (VDMA) rules	O	

Residual risk

Hazard	Measure	Check note √ Complete - Not applicable	Notes
When charging the traction battery	Note the German Ordinance on Industrial Safety and Health (BetrSichV), the operating instructions and the German Engineering Federation (VDMA) rules	O	Association for Electrical, Electronic and Information Technologies (VDE) regulation 0510: In particular - Ensure adequate ventilation - Insulation value within the permissible range
When using battery chargers	Note the German Ordinance on Industrial Safety and Health (BetrSichV), employers' liability insurance association regulation 104 and the operating instructions	O	German Ordinance on Industrial Safety and Health (BetrSichV) and employers' liability insurance association regulation 104
When parking LPG trucks	Note the German Ordinance on Industrial Safety and Health (BetrSichV), employers' liability insurance association regulation 104 and the operating instructions	O	German Ordinance on Industrial Safety and Health (BetrSichV) and employers' liability insurance association regulation 104
With driverless transport systems			
Roadway quality inadequate	Clean/clear driveways	O	German Ordinance on Industrial Safety and Health (BetrSichV)
Load carrier incorrect/slipped	Reattach load to pallet	O	German Ordinance on Industrial Safety and Health (BetrSichV)
Drive behaviour unpredictable	Employee training	O	German Ordinance on Industrial Safety and Health (BetrSichV)
Driveways blocked	Mark driveways Keep driveways clear	O	German Ordinance on Industrial Safety and Health (BetrSichV)
Driveways intersect	Announce right-of-way rule	O	German Ordinance on Industrial Safety and Health (BetrSichV)
No person detection during depositing and retrieval	Employee training	O	German Ordinance on Industrial Safety and Health (BetrSichV)

Danger to employees

According to the German Ordinance on Industrial Safety and Health (BetrSichV) and labour protection law (ArbSchG), the operating company must determine and assess hazards during operation, and establish the labour protection measures required for employees (BetrSichVO). The operating company must therefore draw up appropriate operating instructions (§ 6 ArbSchG) and make them available to the driver. A responsible person must be appointed.

NOTE

Please observe the definition of the following responsible persons: "operating company" and "driver".

The construction and equipment of the truck correspond to the Machinery Directive 2006/42/EC and are therefore marked with CE labelling. These elements are therefore not included in the hazard assessment. Attachments possess their own CE labelling and likewise are not included for that reason. The operating company must, however, select the type and equipment of the trucks so as to comply with the local provisions for deployment.

The result must be documented (§ 6 ArbSchG). In the case of truck applications involving similar hazard situations, the results may be summarised. This overview (see chapter "Overview of hazards and countermeasures") provides help on complying with this regulation. The overview specifies the main hazards that are the most frequent cause of accidents in the event of non-compliance. If other major operational hazards are involved, they must also be taken into consideration.

The conditions of use for trucks are broadly similar in many plants, so the hazards can be summarised in one overview. Observe the information provided by the relevant employers' liability insurance association on this subject.

Safety tests

Carrying out regular inspections on the truck

The operating company must ensure that the truck is checked by a specialist at least once a year or after particular incidents.

As part of this inspection, the technical condition of the truck must be completely tested with regard to accident safety. In addition, the truck must be thoroughly checked for damage that may have been caused by improper use. A test log must be created. The results of the inspection must be retained at least until a further two inspections have been carried out.

The inspection date is indicated by an adhesive label on the truck.

– Arrange for the authorised service centre to perform regular testing on the truck.

– Observe the guidelines for tests carried out on the truck in accordance with FEM 4.004.

The operating company is responsible for ensuring that any defects are remedied without delay.

– Notify your authorised service centre.

NOTE

In addition, observe the national regulations for the country of use.

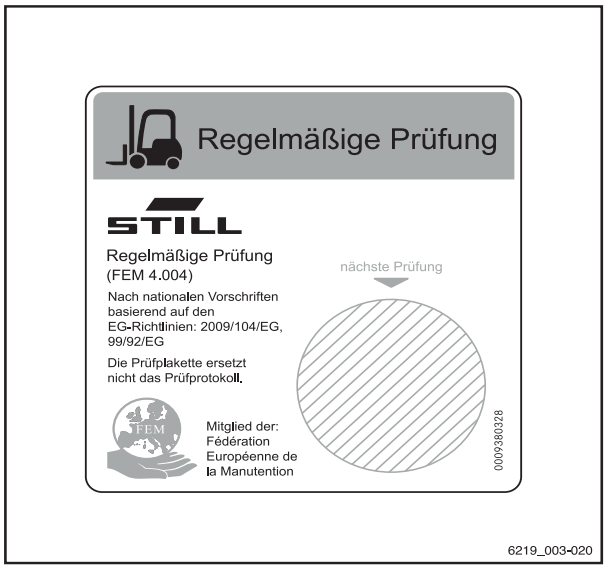

Insulation testing

The insulation of the truck must have sufficient insulation resistance. For this reason, insulation testing in accordance with DIN EN 1175 and DIN 43539, VDE 0117 and VDE 0510 must be conducted at least once yearly as part of the FEM testing.

The insulation testing results must be at least the test values given in the following two tables.

– For insulation testing, contact the authorised service centre.

The exact procedure for this insulation testing is described in the workshop manual for this truck.

NOTE

The truck's electrical system and drive batteries must be checked separately.

Test values for the drive battery

Component	Recommended test voltage	Measurements		Nominal voltage U_{Batt}	Test values
Battery	50 VDC	Batt+ Batt-	Battery tray	24 volts	> 1200 Ω
	100 VDC			48 volts	> 2400 Ω
	100 VDC			80 volts	> 4000 Ω

Test values for the entire truck

Nominal voltage	Test voltage	Test values for new trucks	Minimum values over the duration of the service life
24 volts	50 VDC	Min. 50 kΩ	> 24 kΩ
48 volts	100 VDC	Min. 100 kΩ	> 48 kΩ
80 volts	100 VDC	Min. 200 kΩ	> 80 kΩ

Safety regulations for handling consumables

Permissible consumables

DANGER

Failure to observe the safety regulations relating to consumables may result in a risk of injury, death or damage to the environment.

– Observe the safety regulations when handling such materials.

Refer to the maintenance data table for the permissible substances that are necessary for operation (see ⇒ Chapter "Maintenance data table", P. 5-362).

Oils

DANGER

Oils are flammable!

– Follow the statutory regulations.
– Do not allow oils to come into contact with hot engine parts.
– No smoking, fires or naked flames!

DANGER

Oils are toxic!

– Avoid contact and consumption.
– If vapour or fumes are inhaled, move to fresh air immediately.
– In the event of contact with the eyes, rinse thoroughly (for at least 10 minutes) with water and then consult an eye specialist.
– If swallowed, do not induce vomiting. Seek immediate medical attention.

WARNING

Prolonged intensive contact with the skin can result in dryness and irritate the skin!

- Avoid contact and consumption.
- Wear protective gloves.
- After any contact, wash the skin with soap and water, and then apply a skin care product.
- Immediately change soaked clothing and shoes.

WARNING

There is a risk of slipping on spilled oil, particularly when combined with water!

- Spilt oil should be removed immediately with oil-binding agents and disposed of according to the regulations.

ENVIRONMENT NOTE

Oil is a water-polluting substance!

- *Always store oil in containers that comply with the applicable regulations.*
- *Avoid spilling oils.*
- *Spilt oil should be removed immediately with oil-binding agents and disposed of according to the regulations.*
- *Dispose of old oils according to the regulations.*

Hydraulic fluid

WARNING

These fluids are pressurised during operation of the truck and are hazardous to your health.

- Do not spill the fluids.
- Follow the statutory regulations.
- Do not allow the fluids to come into contact with hot engine parts.

WARNING

These fluids are pressurised during operation of the truck and are hazardous to your health.

- Do not allow the fluids to come into contact with the skin.
- Avoid inhaling spray.
- Penetration of pressurised fluids into the skin is particularly dangerous if these fluids escape at high pressure due to leaks in the hydraulic system. In case of such injury, immediate medical assistance is required.
- To avoid injury, use appropriate personal protective equipment (e.g. protective gloves, industrial goggles, skin protection and skin care products).

ENVIRONMENT NOTE

Hydraulic fluid is a water-polluting substance.

- *Always store hydraulic fluid in containers that comply with regulations*
- *Avoid spills*
- *Spilt hydraulic fluid should be removed immediately with oil-binding agents and disposed of according to the regulations*
- *Dispose of old hydraulic fluid according to the regulations*

Battery acid

WARNING

Battery acid contains dissolved sulphuric acid. This is toxic.

- Avoid touching or swallowing the battery acid at all costs.
- In case of injury, seek medical advice immediately.

WARNING

Battery acid contains dissolved sulphuric acid. This is corrosive.

- When working with battery acid, use appropriate PSA (rubber gloves, apron, protection goggles).
- When working with battery acid, never wear a watch or jewellery.
- Do not allow any acid to get onto clothing or skin or into the eyes. If this does happen, rinse immediately with plenty of clean water.
- In case of injury, seek medical advice immediately.
- Immediately rinse away spilt battery acid with plenty of water.
- Follow the statutory regulations.

ENVIRONMENT NOTE

- Dispose of used battery acid in line with the applicable regulations.

Disposal of consumables

ENVIRONMENT NOTE

Materials that accumulate during repair, maintenance and cleaning must be collected properly and disposed of in accordance with the national regulations for the country in which the truck is being used. Work must only be carried out in areas designated for that purpose. Care must be taken to minimise any environmental pollution.

- Soak up any spilt fluids such as hydraulic oil or gearbox oil immediately using an oil-binding agent.
- Neutralise any spilt battery acid immediately.
- Always observe national regulations concerning the disposal of used oil.

Emissions

The values specified apply to a standard truck (compare the specifications in the "Technical data" chapter). Different tyres, lift masts, additional units etc. may produce different values.

Noise emissions

The values were determined based on measuring procedures from the standard EN 12053 "Safety of industrial trucks - Test methods for measuring noise emissions", based on EN 12001, EN ISO 3744 and the requirements of EN ISO 4871.

This machine emits the following sound pressure level:

Continuous sound pressure level in the driver's compartment

L_{pAZ}	Measurement uncertainty K_{pA}
< 66.3 dB(A)	4 dB(A)

The values were determined in the test cycle on an identical machine from the weighted values for operating statuses and idling.

Time proportions:

- Lifting 18%
- Idling 58%
- Driving 24%

However, the indicated noise levels at the truck cannot be used to determine the noise emissions at workplaces according to the most recent version of **Directive 2003/10/EC** (daily personal noise pollution). If necessary, these noise emissions must be determined by the operating company directly at the workplaces under the actual conditions there (additional noise sources, special application conditions, sound reflections).

NOTE

Please observe the definition of the following responsible person: "operating company".

Vibrations

The vibrations of the machine have been determined on an identical machine in accordance with the standards DIN EN 13059 "Safety of industrial trucks - Test methods for measuring vibration" and DIN EN 12096 "Mechanical vibration - Declaration and verification of vibration emission values".

Frequency-weighted effective value of acceleration on the seat

MSG 65 driver's seat	Measurement uncertainty
< 0.6 m/s^2	K = 0.18

Tests have indicated that the amplitude of the hand and arm vibrations on the steering wheel or on the operating devices in the truck is less than 2.5 m/s^2. There are therefore no measurement guidelines for these measurements.

The individual vibration load on the driver over the course of a working day must be determined by the operating company in accordance with **Directive 2002/44/EC** at the actual place of use in order to consider all additional influences, such as driving route, intensity of use etc.

NOTE

Please observe the definition of the following responsible person: "operating company".

Battery

DANGER

Risk of explosion due to flammable gases!

During charging, lead-acid batteries release a mixture of oxygen and hydrogen (oxyhydrogen gas). This gas mixture is explosive and must not be ignited.

- Make sure that there is always sufficient ventilation in working areas that are entirely or partially enclosed.
- Keep away from open flames and flying sparks.
- Do not smoke.
- Observe the safety regulations for handling the battery.

Radiation

According to the guidelines DIN EN 62471:2009-03 (VDE 0837-471:2009-03), the STILL Safety-Light (variant) is assigned to risk group 2 due to its photobiological hazard potential.

3

Overviews

Overview

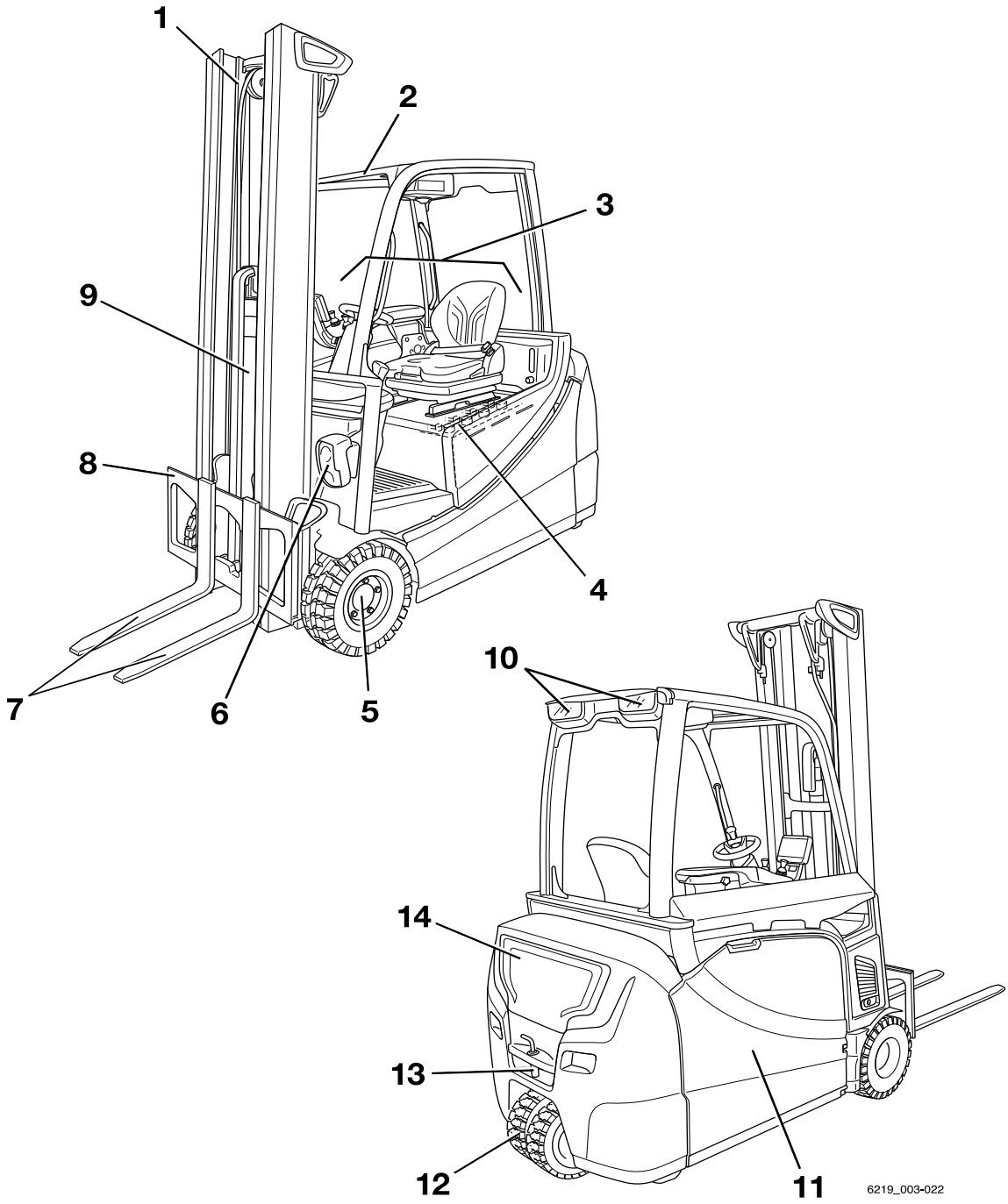

1	Lift mast	8	Fork carriage
2	Overhead guard	9	Lift cylinder
3	Driver's compartment	10	Rear lighting
4	Battery (in the battery compartment)	11	Battery door
5	Drive axle	12	Steering axle
6	Front lighting	13	Towing device
7	Fork arms	14	Counterweight

NOTE

The truck equipment may differ from the equipment shown.

Driver's compartment

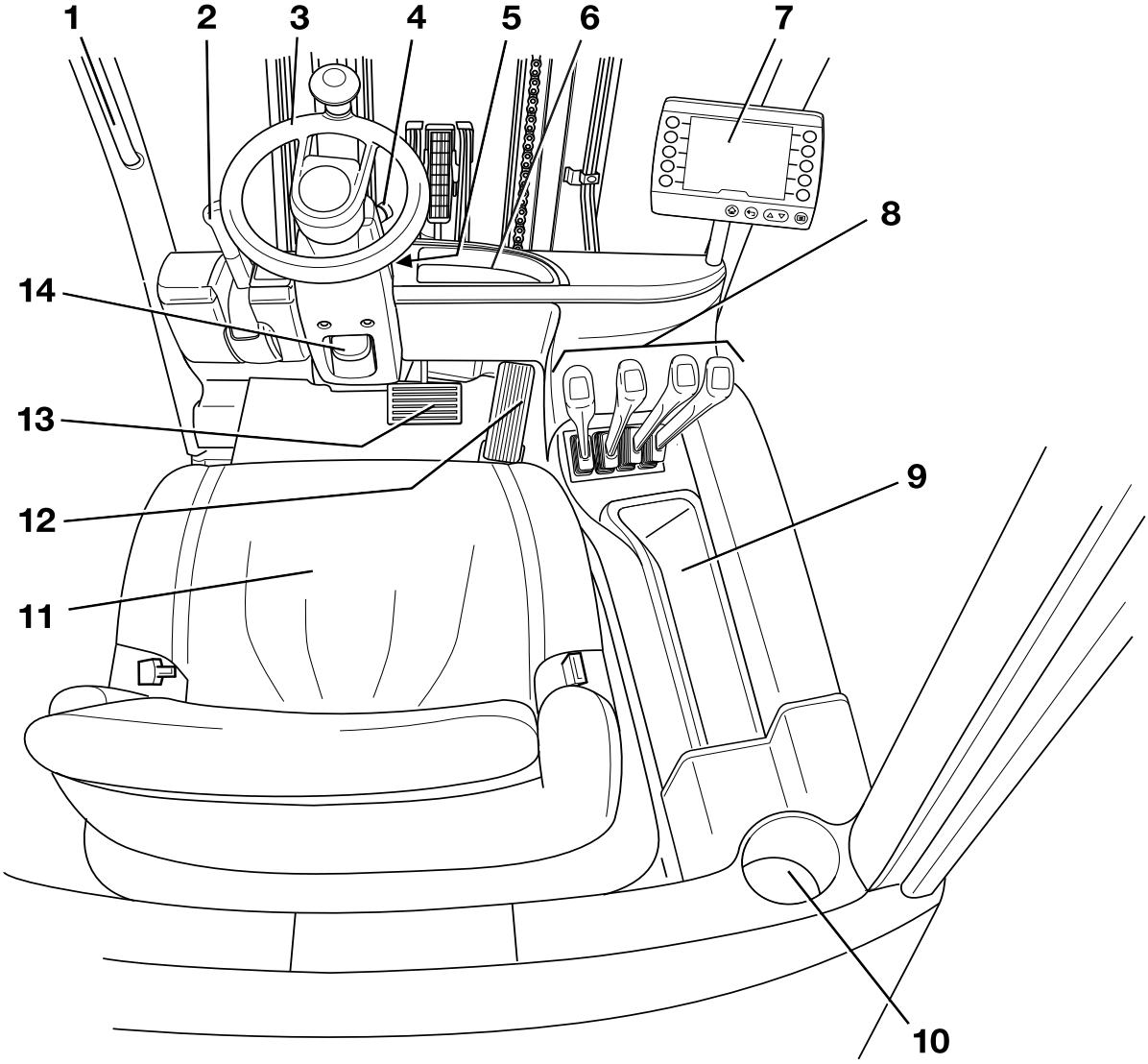

1 Handle
2 Parking brake lever
3 Steering wheel
4 Emergency off switch
5 Key switch
6 Compartment
7 Display/control unit "STILL Easy Control"
8 Operating devices for hydraulic and driving functions
9 Compartment for storing the operating instructions and the hexagon socket wrench for emergency lowering
10 Cup holder for bottles with a maximum size of 1.5 litres
11 Driver's seat
12 Accelerator pedal
13 Brake pedal
14 Steering column adjustment lever

NOTE

The truck equipment may differ from the equipment shown.

Shelf and cup holder

WARNING

Objects may fall into the footwell and obstruct the pedals, which poses a risk of accident!

Objects that fall into the footwell during travel as a result of steering or braking may slip between the pedals (1) and prevent them from working correctly. It may then not be possible to brake the truck when necessary.

- Objects to be stored must be of the correct size so that they cannot fall from the shelf (2) or out of the cup holder (3).
- Bottles with a maximum size of 1.5 litres may be stored in the cup holder.
- Make sure that stored objects cannot fall from the shelves when the truck is started up, steered or braked.

The truck is equipped with a compartment (2) for storing the operating instructions and the hexagon socket wrench for emergency lowering. The cup holder (3) holds bottles up to 1.5 litres in size.

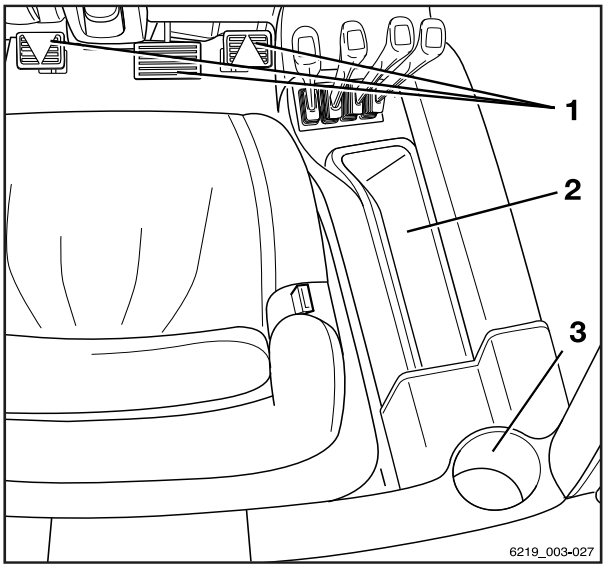

Operating devices and display elements

Display/control unit "STILL Easy Control"

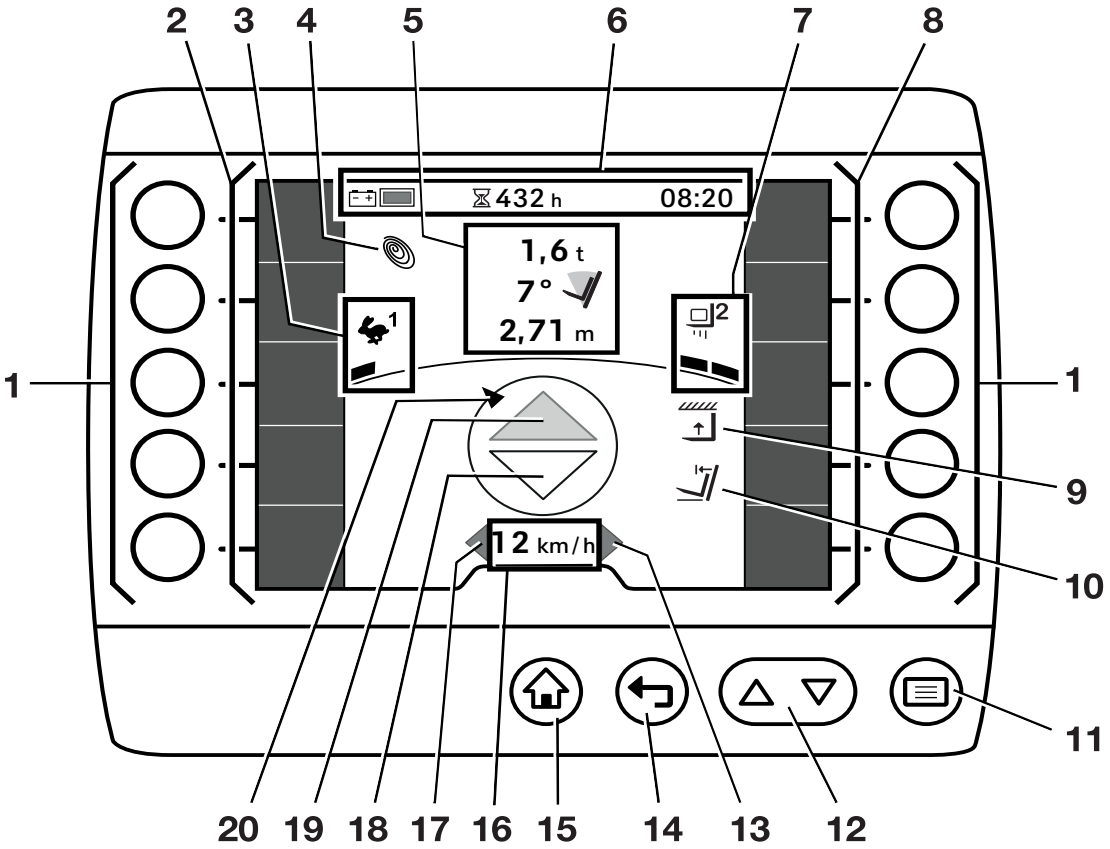

1	Softkeys
2	Left-hand favourites bar
3	Selected drive programme with driving dynamics display
4	Blue-Q symbol
5	Load information (variants): Load measurement Lift-mast tilt angle Lift height
6	Status bar*: battery charge, operating hours, time
7	Selected load programme with load dynamics display
8	Right-hand favourites bar
9	Lift height restriction
10	Automatic mast vertical positioning
11	Menu button
12	Scrolling buttons
13	"Right" turn indicator display
14	Back button
15	Main-display button
16	Driving speed or parking brake Ⓟ
17	"Left" turn indicator display
18	"Reverse" drive direction indicator
19	"Forward" drive direction indicator
20	Display for direction of movement of the truck

* An example status bar (6) is shown in this figure.

– For additional display options, see the chapter entitled "Status bar" in the operating instructions for the "Display/operating unit".

NOTE

If the truck is equipped with the "Ceiling sensor" variant, a decal is located to the left of the "Main display button".

Lithium-ion battery display

The lithium-ion battery display is located on the side of the battery tray. In addition to the display operating unit, it also shows the charging status and information relating to the lithium-ion battery.

– Refer to the chapter entitled "Display" in the operating instructions of the battery manufacturer, "BMZ".

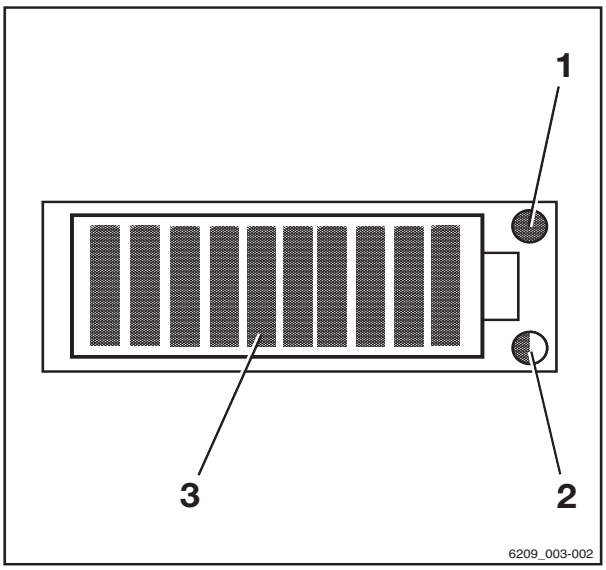

1 Service LED (red)
2 Temperature LED (yellow/red)
3 Charging state LEDs (red/green)

Emergency off switch

The emergency off switch (1) is situated on the right-hand side of the steering column. It disconnects the drives from the power supply.

Do not use this switch to park the truck safely.

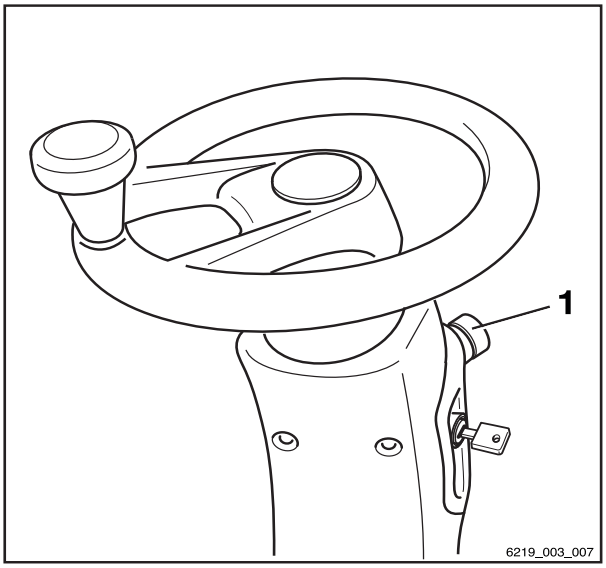

Multi-lever operation

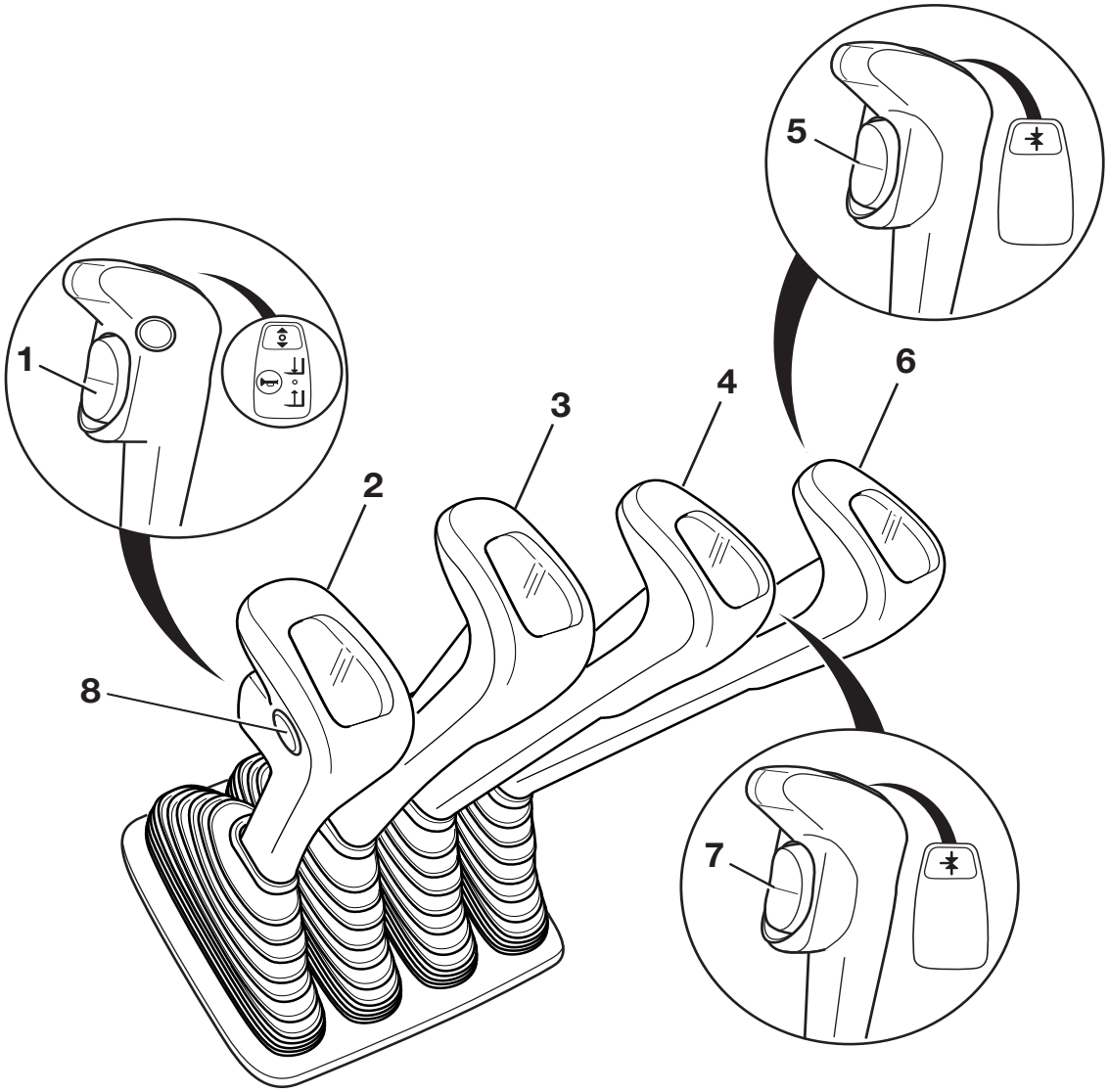

1	Drive direction switch	6	Operating lever for attachments (variant)
2	"Lift/lower" operating lever	7	Function key for the "5th or 6th function" (variants)
3	"Tilt" operating lever	8	Signal horn button
4	Operating lever for attachments (variant)		
5	Function key for the "5th function" (variant)		

NOTE

The drive direction switch (1) does not function in the dual-pedal version (variant).

Double mini-lever

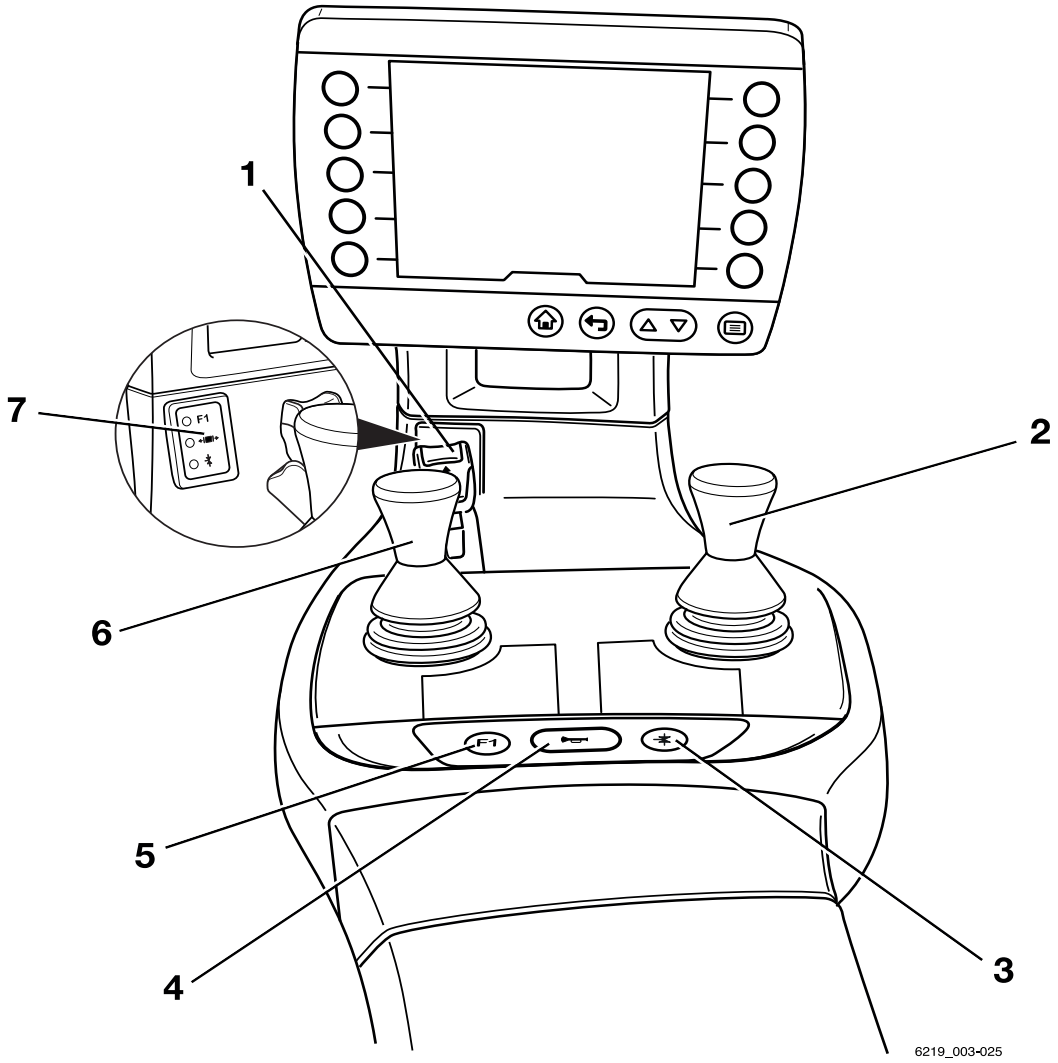

1	Drive direction switch
2	Cross lever "Attachments"
3	Function key for the "5th function"
4	Signal horn button
5	"F1" function key
6	"Lift mast" 360° lever
7	Display field for the hydraulic functions

NOTE

The authorised service centre can assign different functions to the "F1" function key.

Triple mini-lever

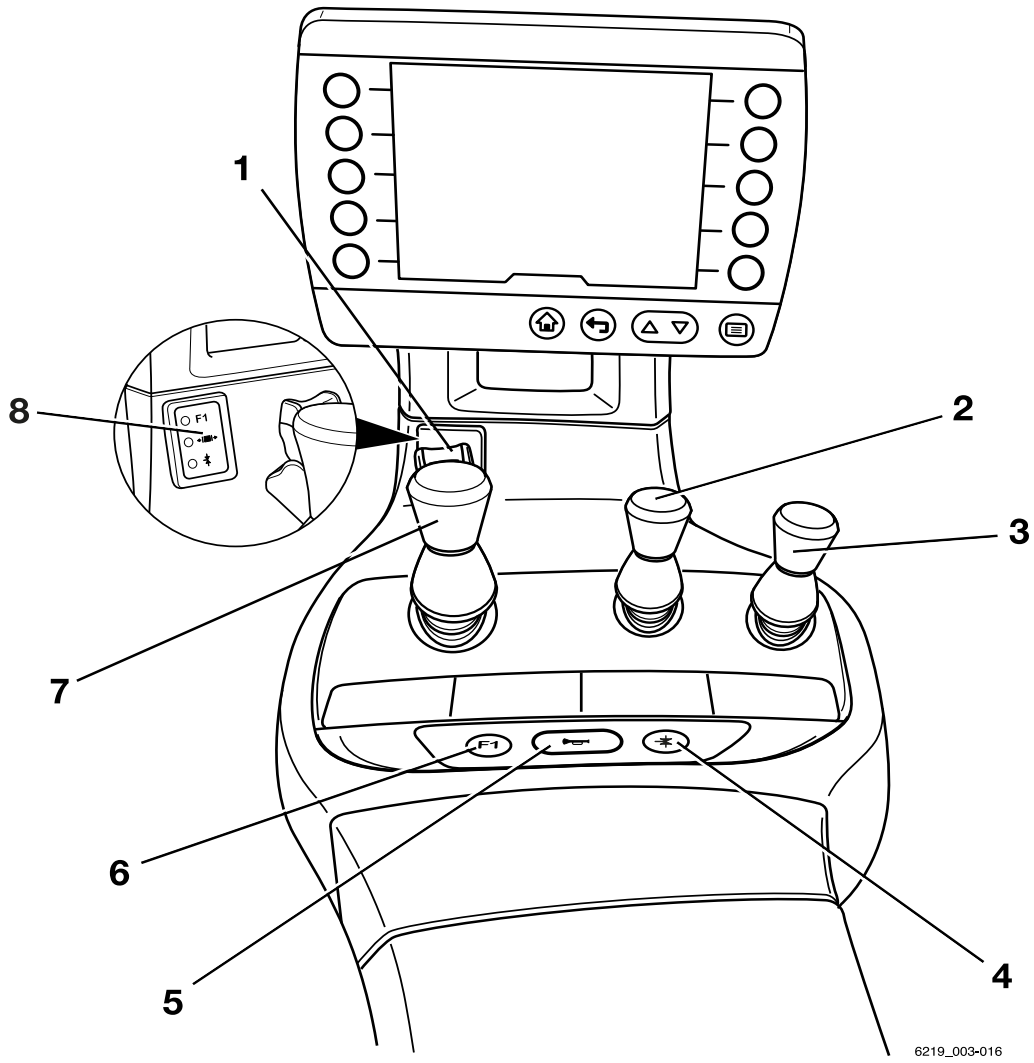

1	Drive direction switch	5	Signal horn button
2	"Auxiliary hydraulics 1" operating lever	6	"F1" function key
3	"Auxiliary hydraulics 2" operating lever	7	"Lift mast" 360° lever
4	Function key for the "5th function"	8	Display field for the hydraulic functions

NOTE

The authorised service centre can assign different functions to the "F1" function key.

Quadruple mini-lever

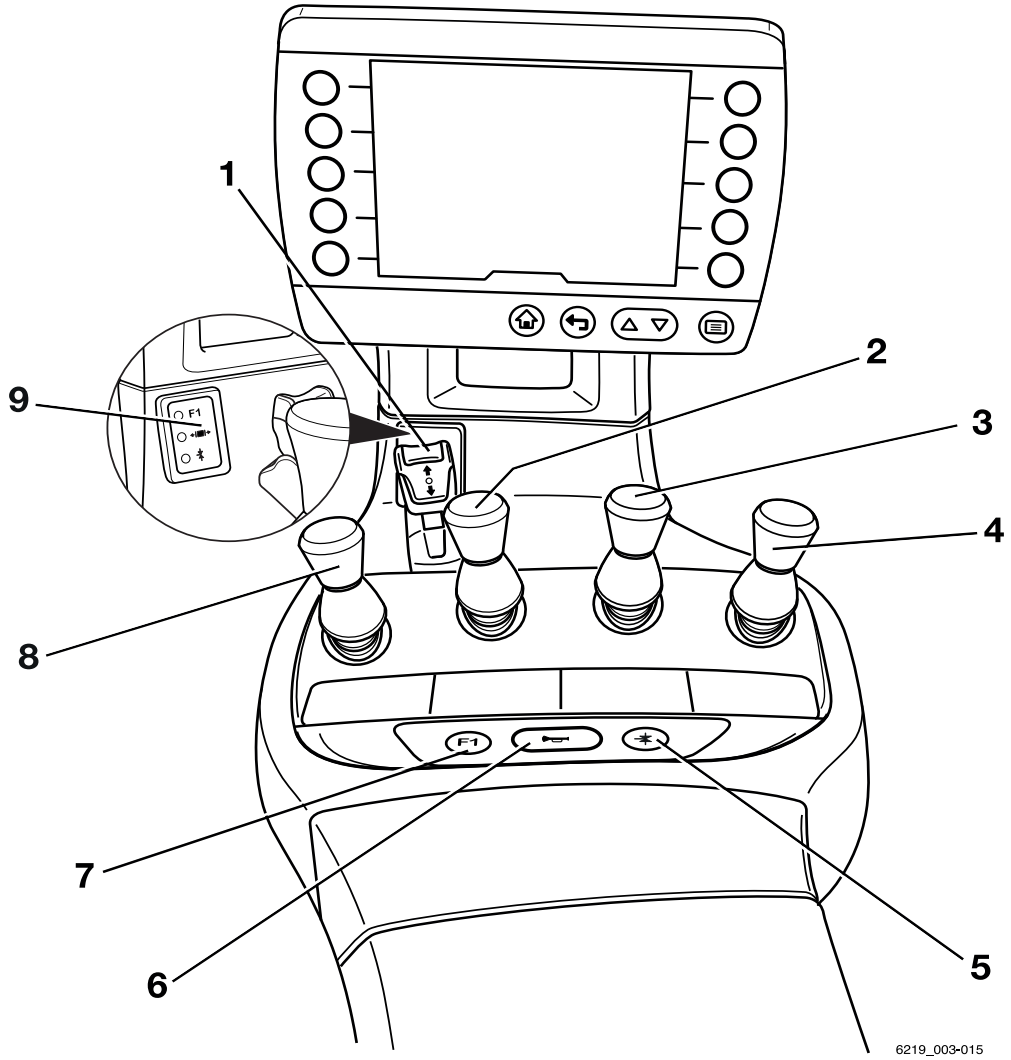

1	Drive direction switch	6	Signal horn button
2	"Tilt" operating lever	7	"F1" function key
3	"Auxiliary hydraulics 1" operating lever	8	"Lift/lower" operating lever
4	"Auxiliary hydraulics 2" operating lever	9	Display field for the hydraulic functions
5	Function key for the "5th function"		

NOTE

The authorised service centre can assign different functions to the "F1" function key.

Fingertip

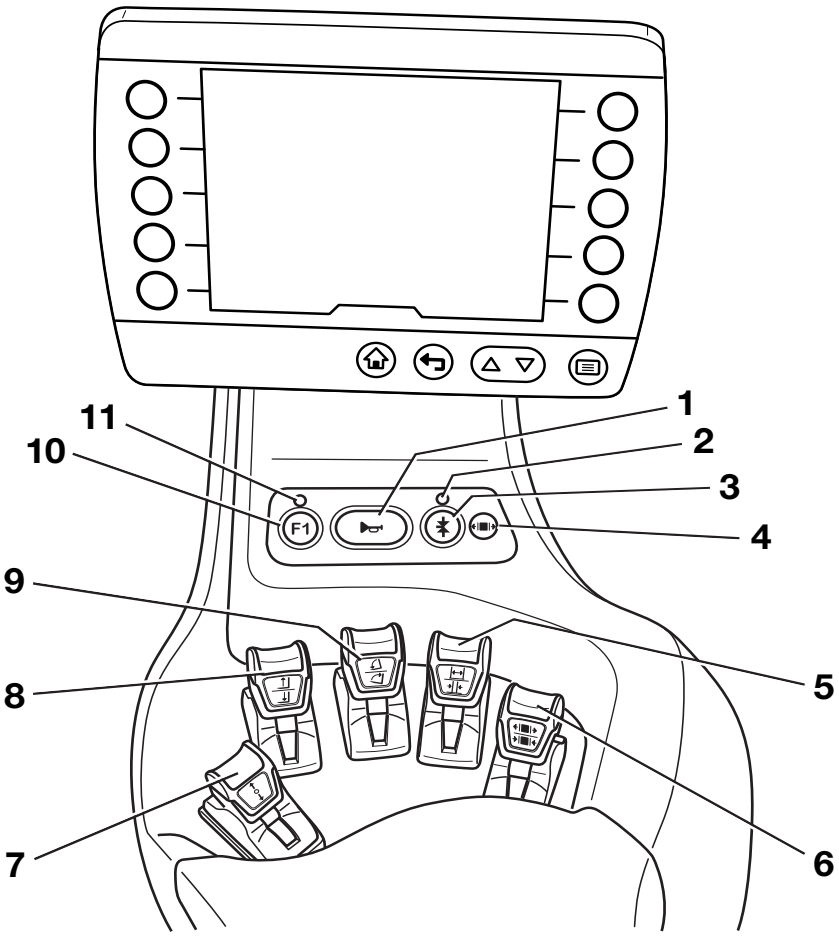

1	Signal horn button	7	Drive direction switch
2	LED for the "5th function"	8	"Lift/lower" operating lever
3	Function key for the "5th function"	9	"Tilt" operating lever
4	LED for the "Clamp release"	10	"F1" function key
5	Operating lever for "Auxiliary hydraulics 1"	11	LED for "F1"
6	Operating lever for "Auxiliary hydraulics 2"		

NOTE

The authorised service centre can assign different functions to the "F1" function key.

Joystick 4Plus

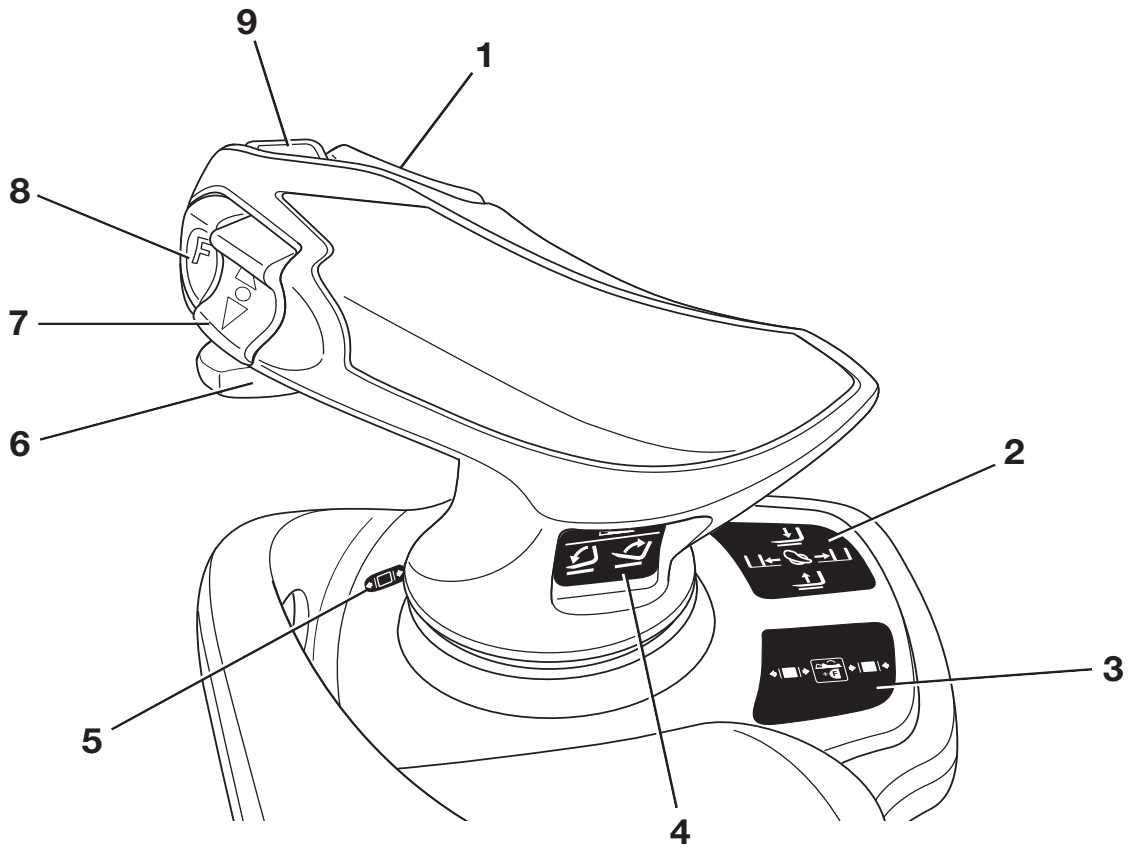

1	Horizontal rocker button for the "3rd and 4th hydraulic function": tilting the lift mast	4	Pictograms for the 3rd and 4th hydraulic function
2	Pictograms for the hydraulic functions: lifting, lowering and sideshift	5	LED for the "clamp release" (variant)
3	Pictograms for the 5th hydraulic function and for the clamp locking mechanism (variant)	6	Slider for the "4th hydraulic function"
		7	Vertical rocker button for the "drive direction"
		8	Shift key "F"
		9	Signal horn button

NOTE

The authorised service centre can assign different functions to the shift key "F", e.g. switchover of the control axles for actuation of the 5th hydraulic function.

Mini-console

The mini console is located on the steering column below the steering wheel.

▷

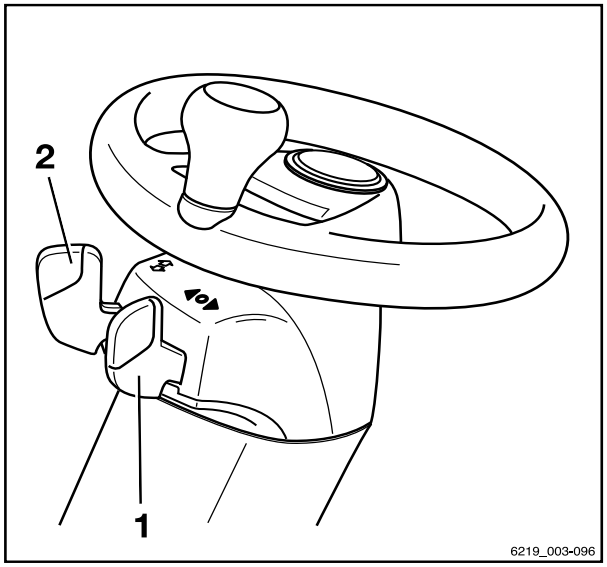

1 Drive direction switch
2 Turn indicator switch

4

Operation

Checks and tasks before daily use

Visual inspections and function checking

WARNING

Risk of injury from falling off the truck!

When climbing onto the truck, there is a risk of getting stuck or slipping and falling. Use suitable equipment to reach higher points on the truck.

- Use only the steps provided for this purpose to climb onto the truck.
- Use equipment such as stepladders or platforms to reach inaccessible areas.

Damage to the truck or the attachment (variant), non-functional switches or safety systems and modification of predefined set values can lead to unpredictable and dangerous situations. To ensure that the truck is operated safely, the visual inspections and function checking must be carried out before daily use. The components that must be checked and their check points are listed in the following table. If damage or other defects are identified on the truck or the attachment (variant) during the following inspections, the truck must not be used until it has been properly repaired. Damage or other defects must be reported to the supervisor or the responsible fleet manager immediately so that repairs by the authorised service centre can be arranged.

▷

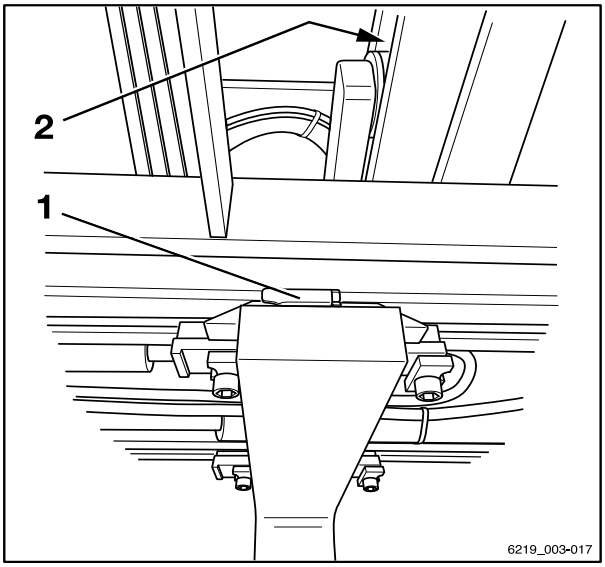

Fork arms and roller tracks

Ensure that the truck is safe for operation each day before it is used:

Component	Course of action
Fork arms, general lifting accessories	Perform a visual inspection to check for deformation and wear (e.g. to check if they are bent, broken or feature significant wear). Check the condition and function of the safety devices (1) to prevent lifting and shifting.
Roller tracks (2)	Make sure that there is a film of grease.
Load chains	Perform a visual inspection to ensure that the chains are intact and have adequate and even tension.

Component	Course of action
Attachments (variant)	Ensure that the attachments are mounted correctly in accordance with the operating instructions from the manufacturer. Perform a visual inspection to ensure that the attachments are intact and are leak-tight. Perform checks to ensure the attachments are working correctly.
Lift cylinders, tilt cylinders, tank, valve block, hoses, pipes, connections	Perform a visual inspection for damage and leakages. Have damaged components replaced by the authorised service centre.
Underside	Check the area under the truck for leaking consumables.
Wheels, tyres	Perform a visual inspection for wear and damage. Make sure that only rims of the same type from the same manufacturer are fitted. In the event of uneven tyre wear, replace both tyres. Observe the safety regulations in the section entitled "Tyres".
Axle	Make sure that no consumables are escaping from the axle.
Overhead guard, guard grille (variant)	Perform a visual inspection for integrity. Check for secure mounting.
Steps	Make sure they are clean (free of ice, not slippery).
Panes of glass (variant)	Perform a visual inspection for integrity. Make sure they are clean (also free of ice).
Handholds	Check for secure mounting.
Maintenance lids	Check the close function and close.
Battery hood	Make sure that there are no unused bores in the battery hood.
Battery door	Perform a visual inspection for integrity and deformation. Check that the interlock is in good condition and is working correctly. Check the close function. Close.
Battery	Check that the interlock is in good condition and is working correctly. Lock the battery.

Component	Course of action
Battery male connector and plug connection	Inspect the battery male connector and the plug connection for moisture or any foreign objects that may have become lodged and remove as necessary, e.g. using compressed air. Perform a visual inspection for integrity and deformation. Check the contacts. Have damaged battery male connectors replaced by the authorised service centre.
Coupling pin, tow coupling (variant)	Perform a visual inspection for deformation and wear (for example: bent, torn, broken). Check the securing bush in the counterweight for integrity and to ensure that it is working correctly. Check that the linchpin is present and working correctly (chain, rope, split pin).
Labelling, adhesive label	Check that labels are present and intact/legible. Replace damaged or missing adhesive labels in accordance with the section entitled "Labelling points".
Driver's seat, seat belt	Check the integrity and function.
Lighting, warning units	Check the integrity and function.
Antistatic belt (3), corona electrode (4) (See the following illustration.)	Perform a visual inspection for integrity. Ensure cleanliness. Make sure that the antistatic belt(3) is still long enough to touch the ground in all situations. The discharge wires of the corona electrode (4) must not touch the ground. The wires discharge the energy to the air.

Depending on the tyres used, the truck is fitted ▷ with one or more antistatic belts (3) and/or with a corona electrode (4). These components ensure that the truck cannot charge statically.

– Do not use the truck if there is any damage or defects.

– In this case, contact your authorised service centre.

Any other necessary tasks are summarised under their own headings, e.g. adjusting the driver's seat.

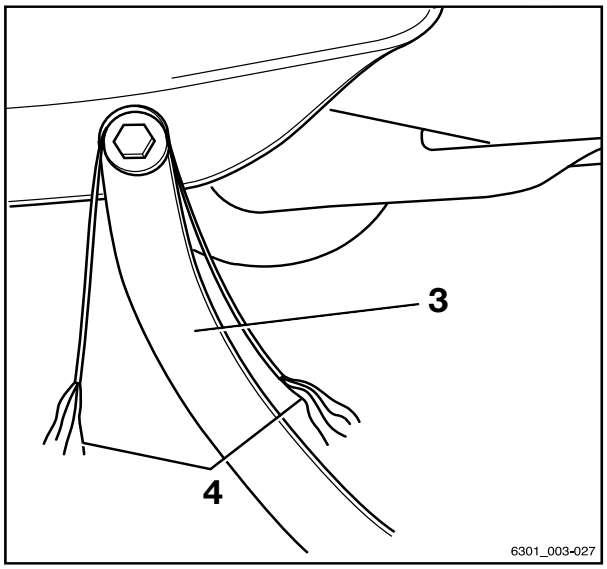

Antistatic belt and corona electrode

Climbing into and out of the truck

⚠ WARNING

Risk of injury when climbing into and out of the truck due to slipping, striking parts of the truck or becoming stuck!

If the footwell cover is very dirty or smeared with oil, there is a risk of slipping. There is a risk of hitting your head on the overhead guard post or of your clothes becoming stuck when climbing out of the truck.

- Ensure that the footwell cover is not slippery.
- Do not jump into or out of the truck.
- Ensure that you have a secure grip on the truck.

⚠ WARNING

Risk of injury when jumping out of the truck!

If your clothing or jewellery (e.g. watch, ring etc.) becomes stuck on a component while you are jumping onto or out of the truck, this can lead to serious injuries (from falling, loss of fingers etc.). It is forbidden to jump out of the truck.

- Do not jump out of the truck.
- Do not wear jewellery at work.
- Do not wear loose-fitting workwear.

⚠ CAUTION

Components may become damaged through incorrect use!

Truck components, such as the driver's seat, steering wheel, parking brake lever etc., are not designed to be used for climbing in and out of the truck and may be damaged due to misuse.

- Only use the fittings specifically designed for the purpose of climbing into and out of the truck.

To assist with climbing into and out of the truck, the footwell (4) must be used as a step and the handle (1) must be used for support. The post of the overhead guard (2) can also be used for support.

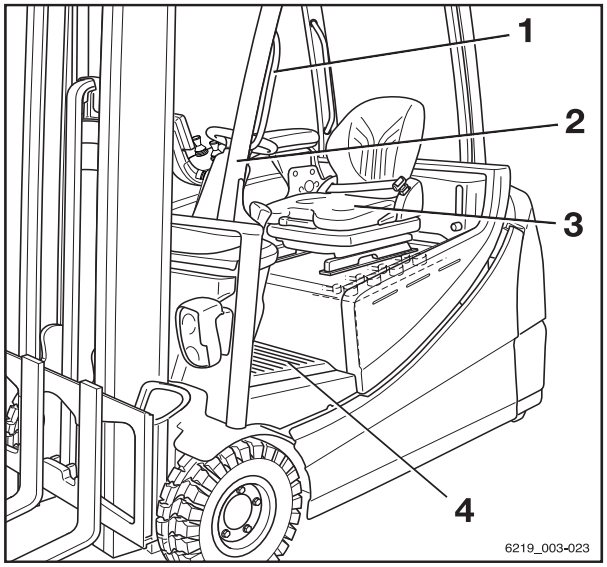

Always **climb into** the truck facing forwards:

- Grip the handle (1) with your left hand and do not let go.
- Place your left foot into the footwell (4).
- Climb into the truck with your right foot and sit down on the driver's seat (3).

Always **climb out** of the truck backwards:

- Grip the handle (1) with your left hand and do not let go.
- Stand up from the driver's seat and place your left foot in the footwell (4).
- Climb out of the truck right foot first.

Adjusting the driver's seat

⚠ WARNING

Risk of accident from sudden adjustment of the seat or of the seat backrest!

The inadvertent adjustment of the seat or of the seat backrest can lead to uncontrolled movements by the driver. The steering or the operating devices can then be actuated unintentionally. This may cause uncontrolled movements of the truck or of the load.

- **Do not** move the seat or the seat backrest while the truck is in motion.
- Adjust the seat and the seat backrest so that all operating devices can be actuated safely.
- Ensure that the seat and the seat backrest are securely engaged.

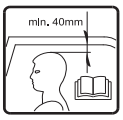

⚠ WARNING

On some equipment variants, the amount of head clearance on the truck may be restricted.

On these specific equipment variants, the distance between the head and the lower edge of the roofing sheet must be at least 40 mm.

NOTE

Observe any separate operating instructions for the seat.

WARNING

To obtain optimum seat cushioning, you must adjust the seat suspension to your own body weight. This course of action is better for your back and protects your health.

– To avoid injuries, keep the swivel area of the seat clear of objects.

Moving the driver's seat

▷

– Raise the lever (1) and hold it in position.
– Push the driver's seat into the required position.
– Release the lever.
– Ensure that the driver's seat is securely engaged.

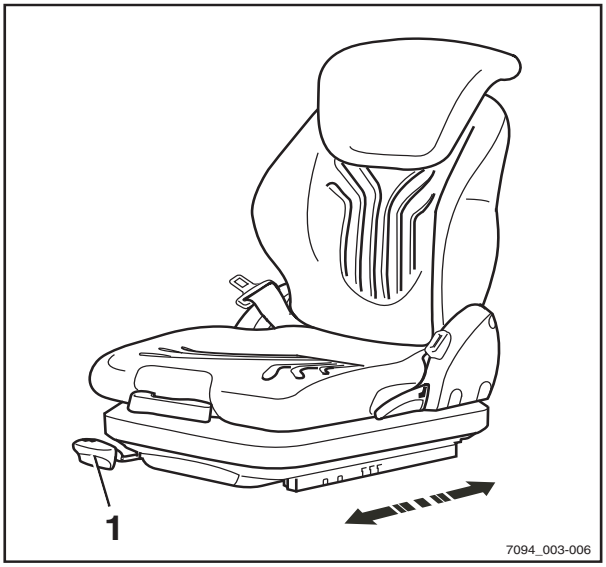

Adjusting the seat backrest

▷

When the seat backrest is released, do not put pressure on the seat backrest.

– Raise the lever (2) and hold it in position.
– Push the seat backrest into the required position.
– Release the lever.
– Ensure that the seat backrest is securely engaged.

NOTE

The backwards tilt angle of the seat backrest can be restricted by the structural conditions in the truck.

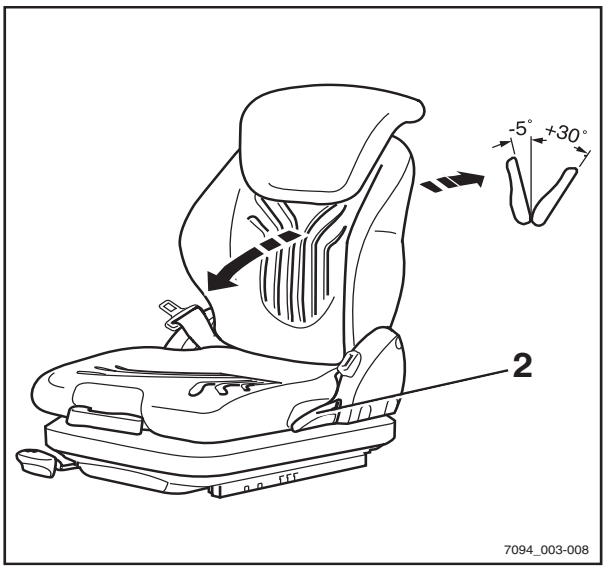

Adjusting the MSG 65/MSG 75 seat suspension

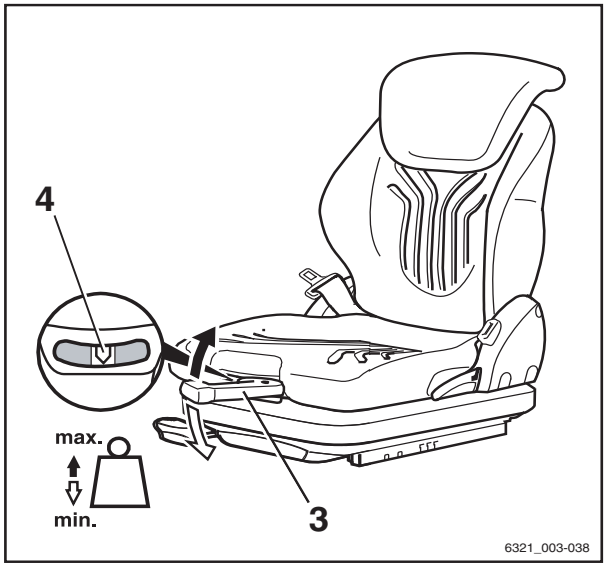

NOTE

The MSG 65/MSG 75 driver's seat is designed for people weighing between 45 kg and 170 kg. The driver's seat can be adjusted to suit the weight of the individual driver. To obtain optimal settings for the seat suspension, the driver must perform the adjustment whilst sitting on the seat.

NOTE

The MSG 75 seat is equipped with electric air suspension that is activated using an electric switch instead of the lever (3).

- Fold out the weight adjusting lever (3).
- Pump the lever up or down to set the driver's weight.
- Return the weight-adjusting lever to the initial central position each time before raising it again (a click can be heard when this position is reached).
- Retract the weight adjusting lever once the adjustment is complete.

NOTE

The correct driver's weight has been selected when the arrow (4) is in the centre position in the inspection window. Once the minimum or maximum weight setting is reached, the seat will not move any further even when you pump the weight adjusting lever.

Adjusting the MSG 75 E seat suspension

NOTE

The MSG 75 E driver's seat is designed for persons weighing between 45 kg and 160 kg. It is equipped with electric air suspension that automatically adjusts to the driver's weight.

- Sit on the driver's seat.
- Turn the key switch to the "I" position.

The seat automatically adjusts to the driver's weight.

Adjusting the lumbar support (variant) ▷

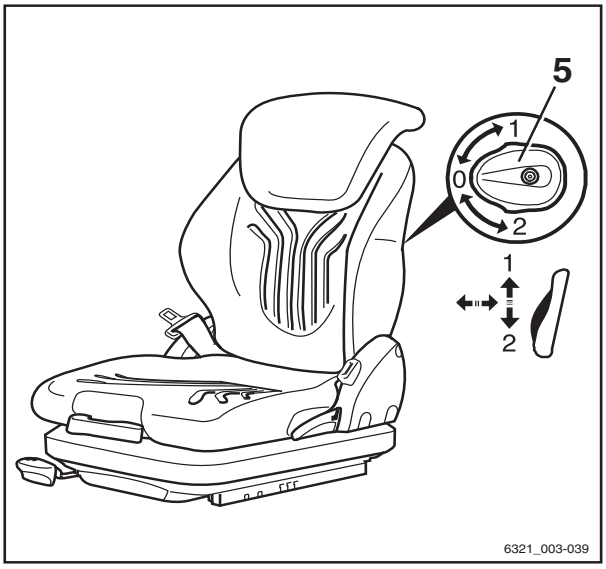

NOTE

The lumbar support can be adjusted to suit the contours of the individual driver's spine. Adjusting the lumbar support moves a convex support cushion into the upper or lower part of the backrest.

– Turn the turning knob (5) up or down until the lumbar support is in the required position.

Adjusting the backrest extension (variant) ▷

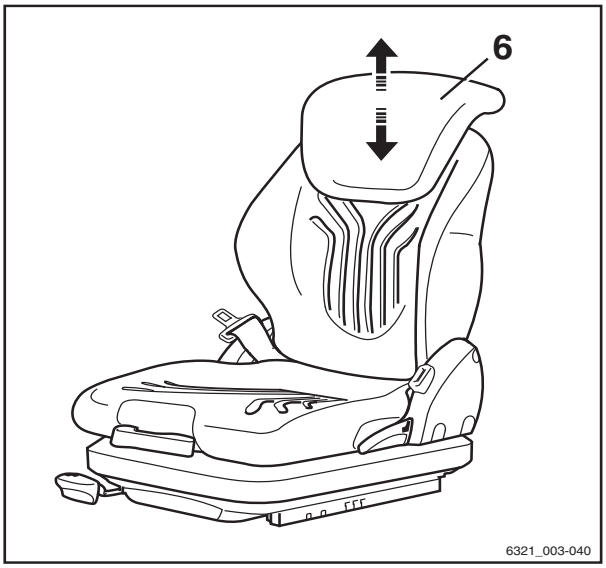

– Adjust the backrest extension (6) by pulling it out or pushing it into the desired position.

To remove the backrest extension, move it past the end stop by firmly pushing it upwards.

Switching the seat heater (variant) on and off ▷

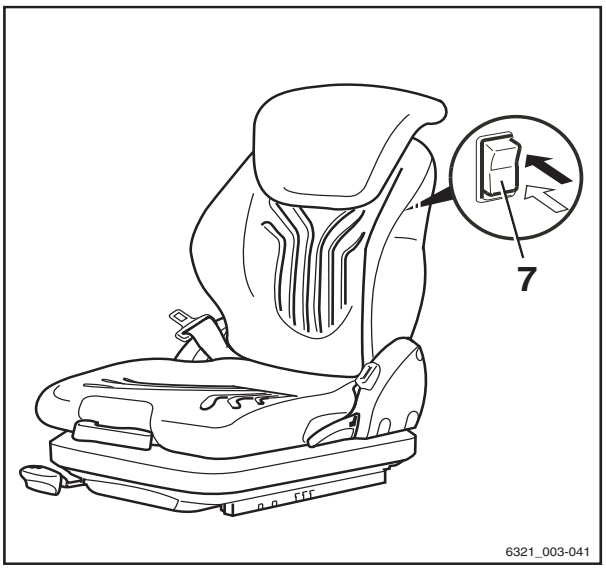

NOTE

The seat heater only works if the driver is sitting on the driver's seat.

– Switch the seat heater (7) on or off using the switch.

Swivelling the driver's seat to the right for reverse travel (variant) ▷

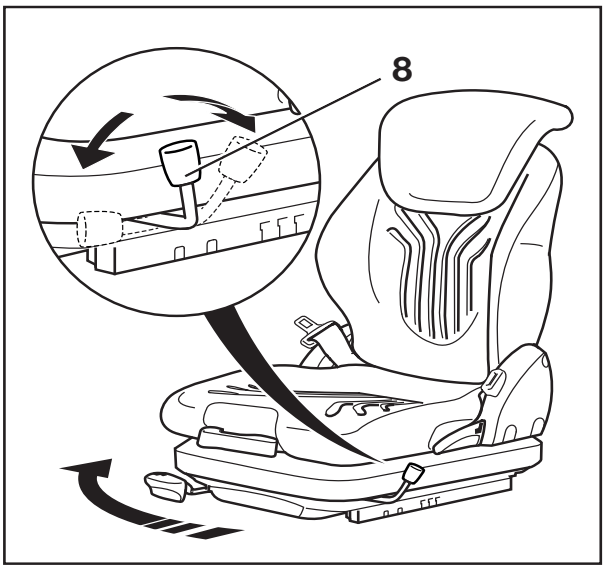

WARNING

Risk of accident due to the seat swivelling.

If the driver's seat swivels while the truck is in motion, the seat position is unstable.

– Swivel the driver's seat only when the truck is at a standstill.

The driver's seat can be swivelled to the right to make reverse travel easier. The optimised seat position means that it is not necessary to turn your upper body as far. This makes it easier to look backwards.

To swivel the seat to the right for reverse travel:

– Sit on the driver's seat.
– To swivel the driver's seat, pull the lever (8) back and hold it in position.
– Swivel the driver's seat to the right until it reaches the stop.
– Move the lever (8) forwards again.
– Make sure that the driver's seat is securely engaged.

Swivelling the driver's seat to the right is intended only for reverse travel. The driver's seat must be swivelled back for forward travel.

To swivel the driver's seat back for forward travel:

- To swivel the driver's seat back to its original position, pull the lever (8) back and hold it in position.
- Swivel the driver's seat to the left until it reaches the stop.
- Move the lever (8) forwards again.
- Make sure that the driver's seat is securely engaged.

Seat belt

DANGER

Even when using an approved restraint system, there is some residual risk of the driver being injured if the truck tips over.

This risk of injury can be reduced through the combined use of the restraint system and the seat belt.

In addition, the seat belt protects against the consequences of rear-end collisions and falling off a ramp.

- We therefore recommend that you also use the seat belt.

DANGER

Only bracket doors (variant) and the driver's cab (variant) with closed, fixed doors constitute driver restraint systems. Plastic doors (weather protection) do not constitute a restraint system!

If the doors are open or have been removed, you must use an alternative suitable restraint system (e.g. a seat belt)!

Fastening the seat belt

DANGER

Risk to life when driving without a seat belt!

If the truck tips over or crashes into an obstacle and the driver is not wearing the seat belt, the driver may be thrown from the truck. The driver could slide under the truck or collide with an obstacle.

There is a risk of fatal injury!

- Fasten the seat belt before every trip.
- Do not twist the seat belt when fastening it.
- Only use the seat belt to secure one person!
- Have any malfunctions repaired by the authorised service centre.

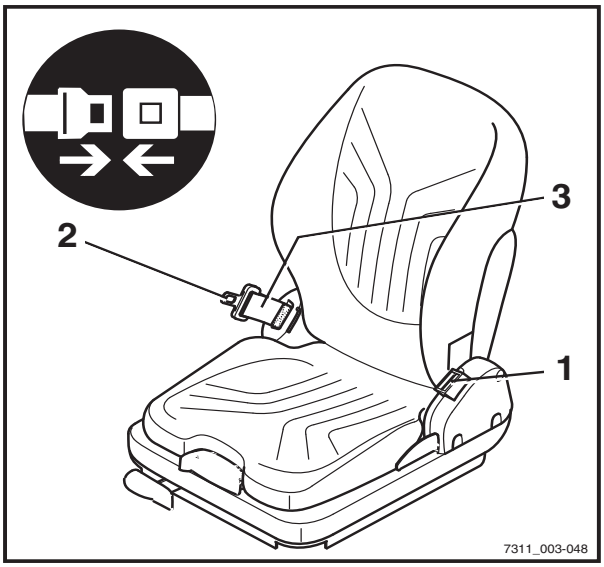

NOTE

The buckle has a buckle switch. When the belt was not fastened, the following occurred:

- *The message* `Close safety belt` *appears in the display-operating unit.*
- *The truck will not drive at speeds faster than 4 km/h.*

- Pull the seat belt (3) smoothly out of the belt retractor and fasten closely around the body over the thighs.

NOTE

Sit as far back as possible so that your back is leaning against the seat backrest. The automatic blocking mechanism permits sufficient freedom of movement on the seat.

- Click the belt tongue (2) into the buckle (1).
- Check the tension of the seat belt. The belt should fit closely around your body.

Special feature for trucks with a cab (variant)

If the truck is equipped with a cab (variant), it will have a cab door sensor. If the seat belt is not fastened and the cab door is not closed, the driving speed is limited to 4 km/h. The message `Close the cab door or fasten belt` appears in the display.

Fastening on a steep slope

The automatic blocking mechanism prevents the belt from being extended whenever the truck is on a steep gradient. It is no longer possible to pull the seat belt out of the belt retractor.

– Move away carefully from the slope.

– Fasten the seat belt.

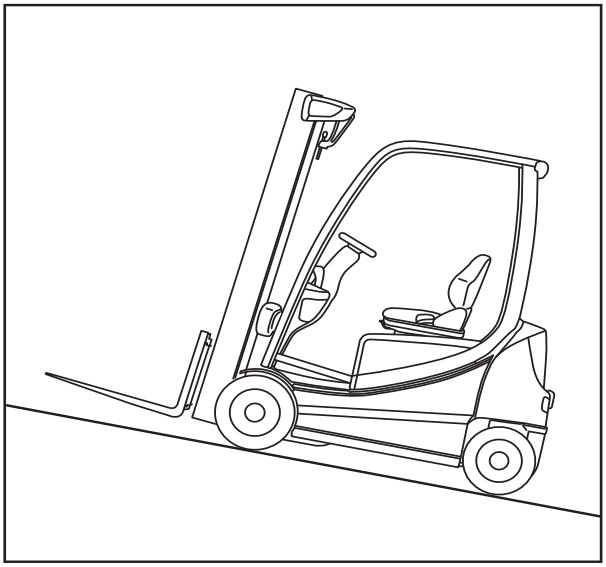

Releasing the seat belt

– Press the red button (4) on the buckle (1).

– Slowly guide the belt tongue back to the retractor by hand.

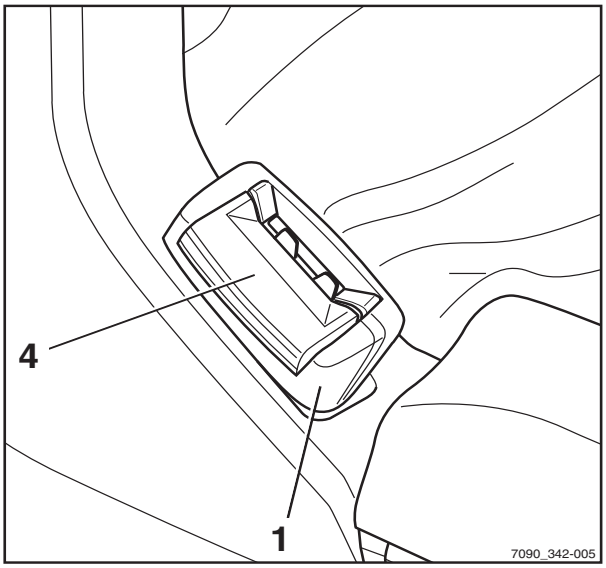

NOTE

Do not allow the seat belt to retract too quickly. The automatic blocking mechanism may be triggered if the belt tongue strikes the housing. It will then no longer be possible to pull the seat belt out with the usual force.

– Using increased force, pull the seat belt around 10 to 15 mm out of the retractor to disengage the blocking mechanism.

– Slowly allow the seat belt to retract again.

– Protect the seat belt from dirt, for example, by covering it.

Malfunction due to cold weather conditions

– If the buckle or belt retractor are frozen, thaw the buckle and the belt retractor and dry the parts to prevent them from refreezing.

⚠ CAUTION

The seat belt may be damaged by heat!

Do not subject the buckle or belt retractor to excessive heat when thawing.

– Do not use air warmer than 60°C when thawing.

Adjusting the armrest

⚠ DANGER

There is a risk of accident if the armrest lowers suddenly, causing the driver to move in an uncontrolled manner.

This may result in unintentional actuation of the steering or operating devices and thus cause the truck or load to move in an uncontrolled fashion.

– Do not adjust the armrest while driving.
– Adjust the armrest so that all operating devices can be actuated safely.
– Ensure that the armrest is securely tightened.

Adjusting the length of the armrest

– Release the star-grip handle (1) by turning to the left.
– Shift the armrest (2) into the desired position.
– Tighten the star-grip handle by turning to the right.
– Check that the armrest is firmly attached.

Adjusting the height of the armrest

– Release the hand wheel (3) by turning to the left.
– Shift the armrest (2) into the desired position.
– Tighten the hand wheel by turning to the right.
– Check that the armrest is firmly attached.

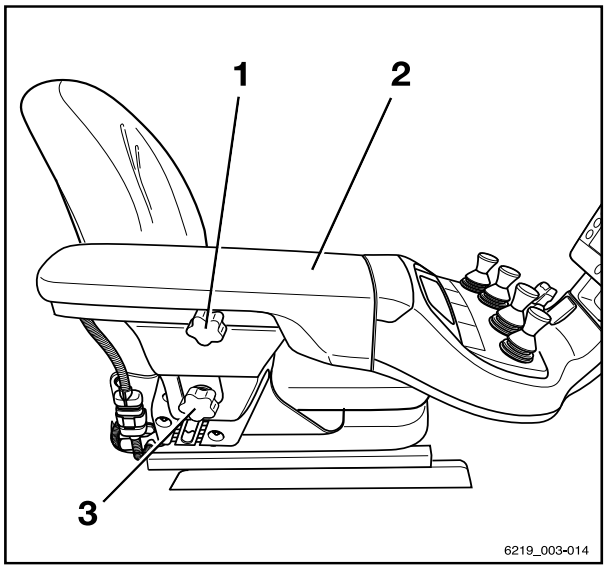

Adjusting the steering column

– Pull up and hold the lever (2) for steering column adjustment.

– Position the steering column (1), then push the lever down again and allow the steering column to engage.

DANGER

Risk of accident!

– Ensure that the steering column is positioned securely.

The steering column must click into place.

Never adjust the steering column while driving.

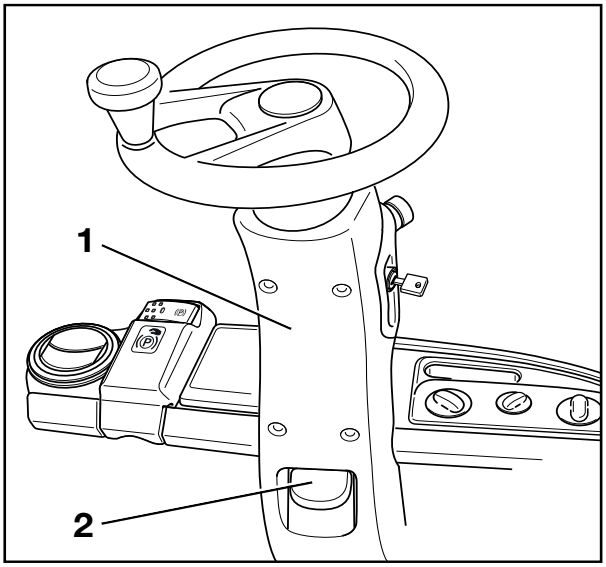

Unlock the emergency off switch ▷

– Turn the emergency off switch (1) clockwise until it pops out.

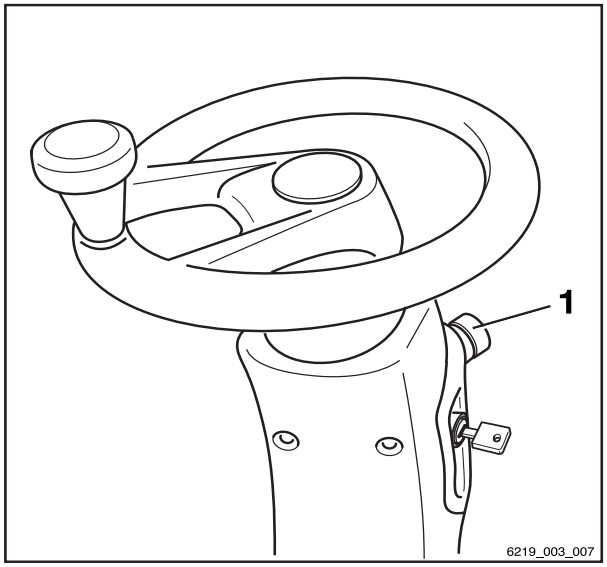

Checking the emergency off function ▷

⚠ WARNING

No electric braking assistance is available when the emergency off switch is actuated!

Actuating the emergency off switch disconnects the drives from the power supply.

– To brake, actuate the service brake.

– Drive the truck forwards slowly.

– Push the emergency off switch (1).

The truck will coast to a stop.

The message `Emergency off active` appears on the display/operating unit.

– Stop the truck by actuating the brake pedal.

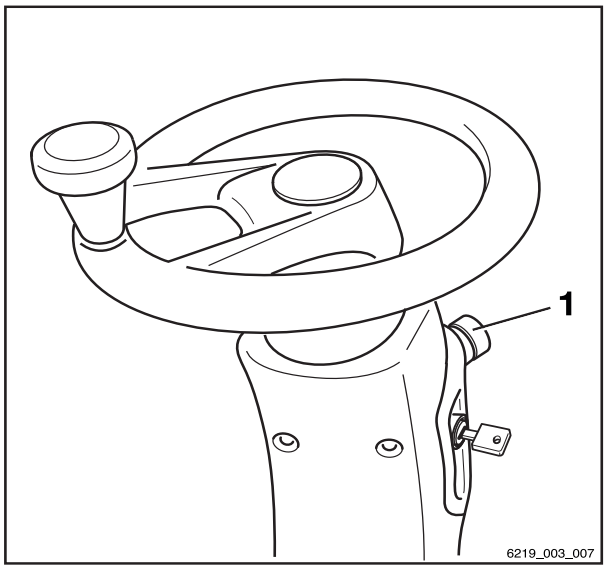

NOTE

In trucks with an electric parking brake, the electric parking brake will be applied as soon as the truck comes to a stop.

– Turn the emergency off switch (1) clockwise until it pops out.

The truck performs internal self testing. It is then ready for operation again.

Operating the signal horn

The signal horn is used to warn people against imminent danger or to announce your intention to overtake.

– Press the signal horn button (1).

The signal horn sounds.

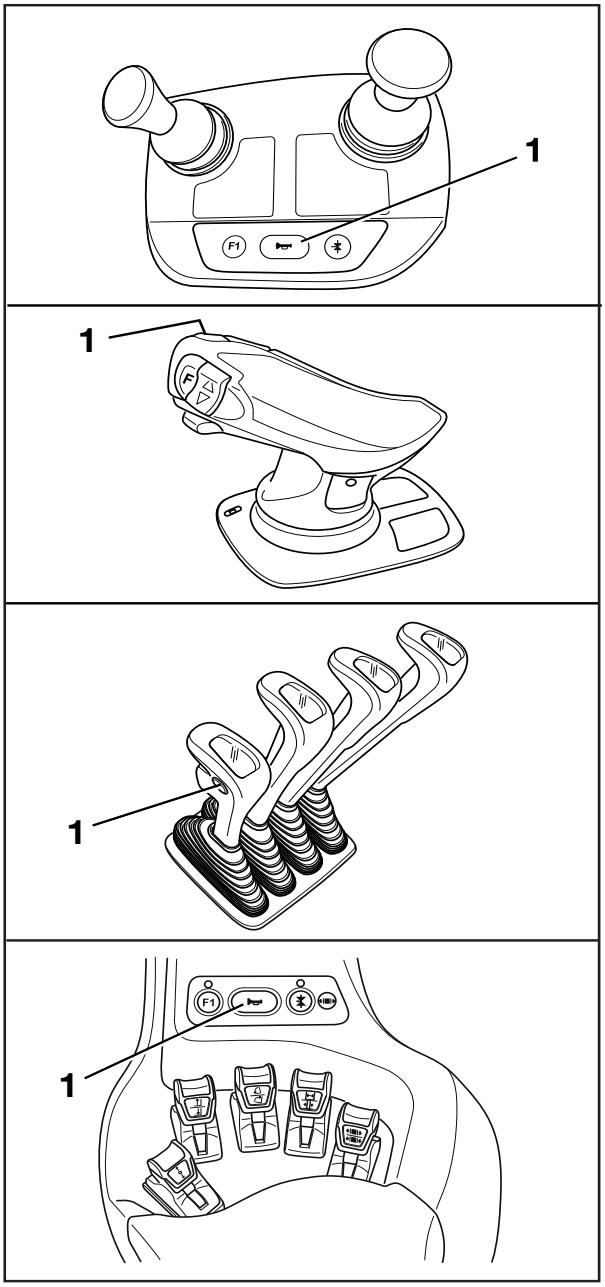

Driver's cab

DANGER

Risk of fatal injury in the event of falling from the truck if it tips over!

In order to prevent the driver from sliding underneath the truck and being crushed if the truck tips over, a restraint system must be in place and must be used. The restraint system prevents the driver from being thrown from the truck if it tips over. The cab door must be sturdy and be closed in order for the driver's cab to function as a driver restraint system. Fabric-covered cabs (variant) with doors made of plastic or canvas do not constitute a driver restraint system and offer no protection from the consequences of the truck tipping over!

- Close the cab door before use.
- If the door is open or has been removed, use a comparably secure restraint system.
- We recommend that you always use the seat belt.

Checking the brake system for correct function

DANGER

Risk of accident in the event of failure of the brake system!

If the brake system fails, the truck will be insufficiently braked.

– Do **not** operate the truck if the brake system is faulty.

Checking the electric brake

DANGER

Risk of accident if the braking effect of the electric brake is inadequate!

The braking effect of the electric brake may be insufficient for emergency braking.

– Always actuate the brake pedal (1) for emergency braking.

DANGER

Risk of accident due to excessive speed!

Depending on the charge state of the battery, regenerative braking may be insufficient when driving downhill, meaning that the maximum permissible speed of the truck is exceeded.

– Press the brake pedal (1).

If the driving speed is restricted or if the opposite drive direction is selected, the truck is braked using the electric brake.

– To actuate this, release the accelerator pedal (2).

The truck must decelerate and remain stationary.

– If the truck does not slow down, press the brake pedal (1).

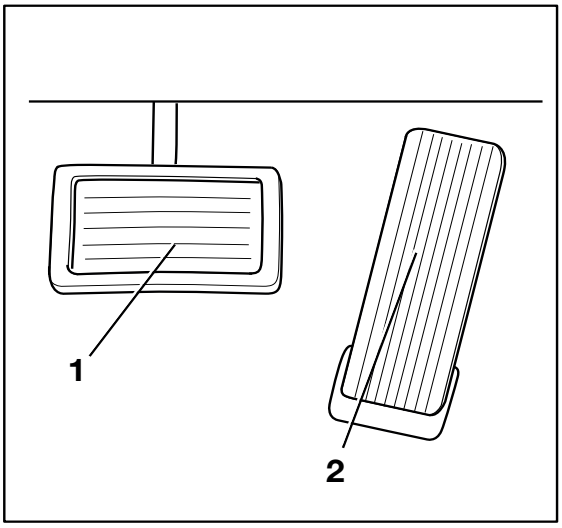

Checking the service brake

– Release the parking brake.

– Press the brake pedal (1).

There must be a slight pedal clearance and then a noticeable brake pressure point.

– Accelerate the unladen truck in a clear area.

– Press the brake pedal (1) firmly.

The truck must decelerate noticeably.

Checking the parking brake on a gradient or a ramp

DANGER

Risk to life if the truck rolls away!

If the parking brake is not applied, the truck could run people over.

– Do not leave the truck until the parking brake has been applied.

– Stop the truck on a steep gradient (e.g. a ramp) and actuate the parking brake.

The parking brake must hold the truck on the incline.

– If the truck rolls away despite the parking brake being applied, stop the truck using the service brake.

– In an emergency, secure the truck with wedges on the downhill-facing side to prevent it from rolling away.

– Have the parking brake checked and repaired by the authorised service centre.

Checking the parking brake on a level surface

WARNING

Risk of accident from abrupt deceleration!

The truck will decelerate abruptly if the parking brake is applied.

– Fasten the seat belt.

– Use the available restraint systems.

– Find a sufficiently large and open area in which nobody will be endangered or obstructed.

– Accelerate the truck to walking speed.

– Press the emergency off switch.

NOTE

When the emergency off switch is actuated, note the following:

- *The electric brake is disabled. The truck no longer responds to the command issued by the accelerator pedal.*
- *The power steering is no longer available. Steering forces are increased due to the remaining emergency steering function.*

– Release the accelerator pedal.

– Apply the parking brake.

The truck must decelerate and remain stationary.

– If the truck only coasts and does not decelerate or decelerates only slightly, stop the truck using the service brake.

– Secure the truck with chocks so that the truck does not roll away.

– Have the parking brake checked and repaired by the authorised service centre.

NOTE

Special features of the electrical parking brake:

- *The deceleration cannot be influenced.*
- *The electrical parking brake is applied moderately until the truck comes to a stop.*
- *The emergency off switch must be unlocked to release the electrical parking brake.*

Checking the steering system for correct function

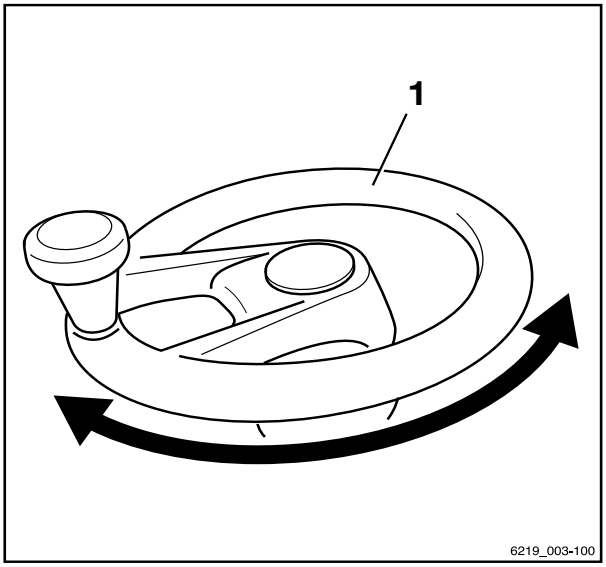

DANGER

If the hydraulics fail, there is a risk of accident as the steering characteristics have changed.

– Do not operate the truck if it has a defective steering system.

– Operate the steering wheel (1). The steering play while stationary must not be more than two finger widths.

Checking the automatic mast vertical positioning (variant) for correct function

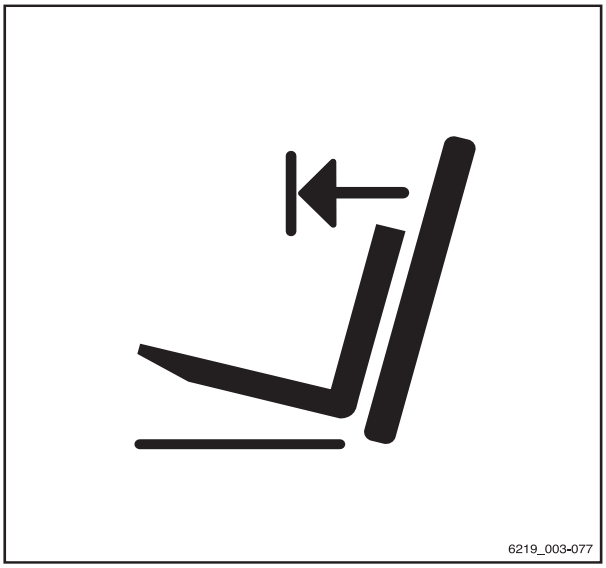

CAUTION

Risk of damage to property due to the lift mast colliding with racks or other objects!

– Before using the "Automatic mast vertical positioning" comfort feature, position the truck at a sufficient distance from racks and other objects.

Goods, such as paper rolls, can be lowered vertically with precision using the "Automatic mast vertical positioning" comfort feature, thereby avoiding damage when unloading. "Automatic mast vertical positioning" functions when the lift mast is tilted forwards. The tilt cylinders run into the end stops gently to prevent hard vibrations and impacts. Oscillating motions of the truck are minimised, thus increasing work safety. Automatic mast vertical positioning reduces wear on various components and therefore reduces repair costs.

The "Automatic mast vertical positioning" comfort feature consists of the following individual functions:

- Display of the "Automatic mast vertical positioning" feature
- Automatic startup of the "Automatic mast vertical position" feature

The truck can also be fitted with only the display for the "lift mast tilt angle".

NOTE

Check the function of automatic mast vertical positioning whenever the truck is used.

– Push the "automatic mast vertical positioning" softkey .

The symbol appears in the display.

– Tilt back the lift mast until it reaches the end stop.

– Tilt the lift mast forwards.

The lift mast must stop in the vertical position.

The automatic mast vertical positioning can be used.

– If the lift mast does not stop in the vertical position, do not use the function.

– In this case, contact your authorised service centre.

Switching on

Switching on using the key switch

WARNING

All checks and tasks required before daily use must have been performed without any defects being identified before switching on the truck.

– Perform the "visual inspections and functional checks".

– **Do not** operate the truck if defects have been detected; contact the authorised service centre.

– Insert the switch key (1) into the key switch and turn it to the "I" position. ▷

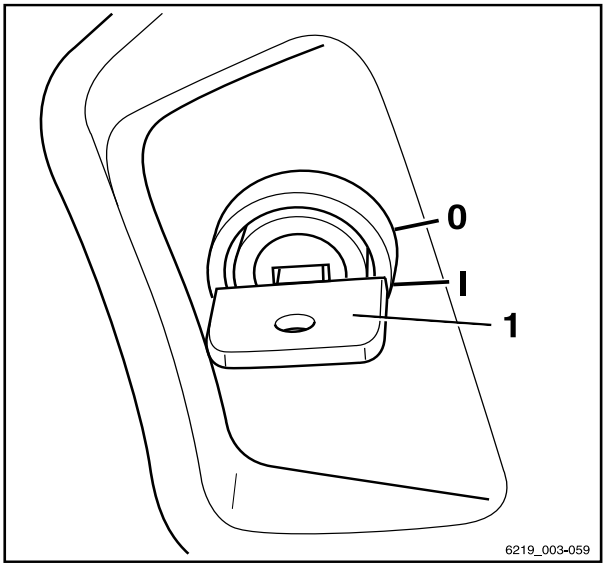

NOTE

If the truck is equipped with the "Access authorisation with PIN code" variant, the display initially changes to the input menu for access authorisation.

Once the truck is ready for operation, the main screen is shown on the display.

Main screen ▷

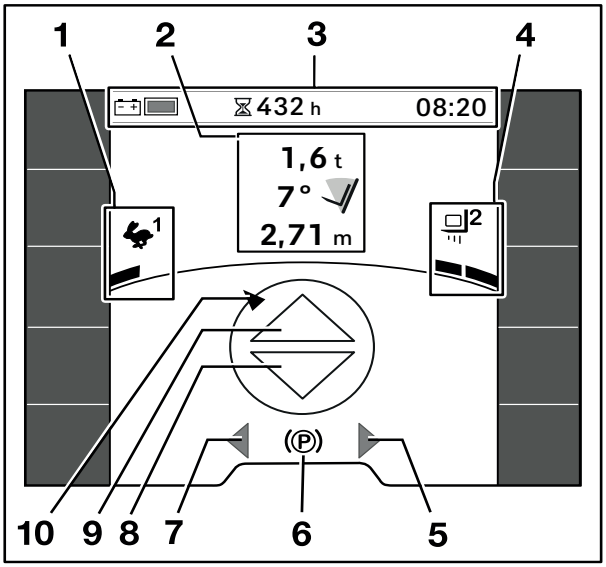

1 Selected drive programme with driving dynamics display
2 Load information (variants)
3 Status bar: battery charge, operating hours, time
4 Selected load dynamics programme with dynamics bar
5 "Right" turn indicator display
6 Driving speed or parking brake (P)
7 "Left" turn indicator display
8 "Reverse" drive direction indicator
9 "Forward" drive direction indicator
10 Steering angle display

Additional information may appear on the display.

– Refer to the chapter entitled "Display messages".

NOTE

After connecting the battery, the correct charge state may not be displayed until the battery is placed under load by driving or lifting operations.

Switching on via push button (variant)

⚠ WARNING

All checks and tasks required before daily use must have been performed without any defects being identified before switching on the truck.

– Perform the "visual inspections and functional checks".
– **Do not** operate the truck if defects have been detected; contact the authorised service centre.

The "Switch on via push button" variant is available only in conjunction with the "FleetManager" or "Access authorisation with PIN code" variants. In place of the key switch, the truck has a push button (1) that is used to switch the truck on and off.

– To switch on the truck, press the push button (1) or sit on the driver's seat. A message on the display/operating unit asks the operator to place the FleetManager card in position or to enter the PIN code.

Authorisation via the "FleetManager" card or the PIN code must take place within a specified period of time:

- Within 30 seconds if the driver's seat is not occupied
- Within 60 seconds if the driver's seat is occupied

If this does not happen, the truck switches off again.

– To switch on the truck, press the push button (1) or sit in the driver's seat.

If authorisation was successful, the truck is ready for operation. The main view is shown on the display.

– To switch off the truck, press the push button (1) and hold for 1 second.

▷

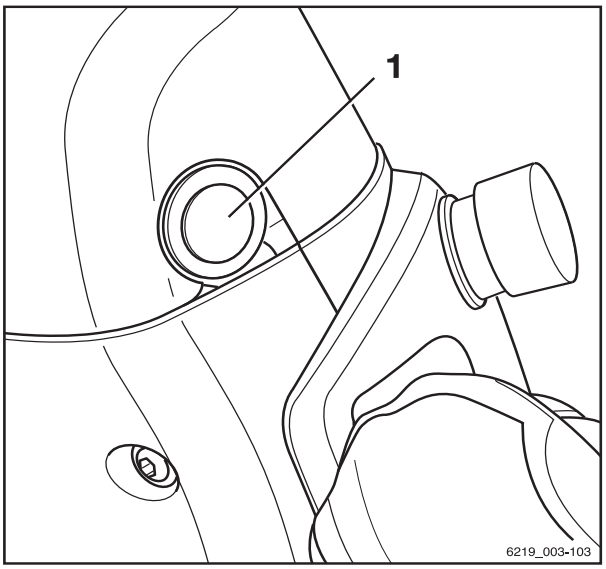

NOTE

For the variant with

- *"Access authorisation with PIN code", see the relevant section.*
- *"FleetManager", see the "original operating instructions for FleetManager".*

Display-operating unit

Access authorisation with PIN code (variant)

Trucks equipped with the "Access authorisation with PIN code" variant are protected against unauthorised use by a PIN code. So that the same truck can be used by different drivers, individual PIN codes can be specified.

When the key switch is switched on, the "Access authorisation" input menu appears. ▷

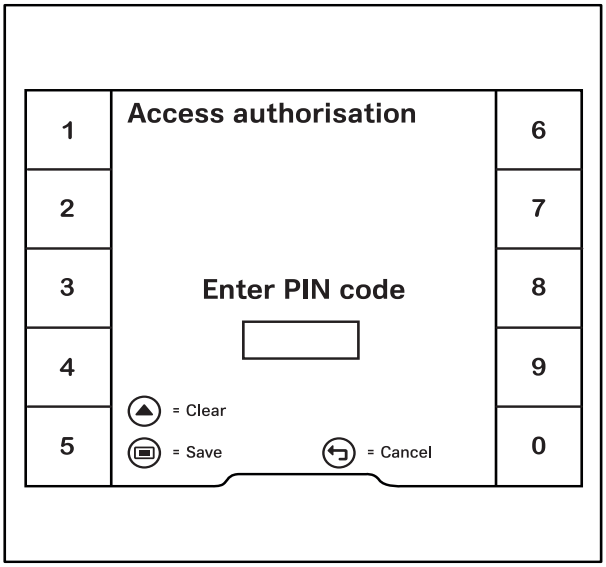

All hydraulic functions and drive functions of the truck are blocked. In the StVZO (German Road Traffic Licensing Regulations) variant, the function of the hazard warning system (variant) is guaranteed.

– To activate the blocked functions, use the softkeys to enter the PIN code.

– To confirm, push the ▤ button.

If the input was correct, the display changes to the main display. The truck is ready for use.

– If the input was incorrect, enter the PIN code again.

NOTE

The authorised service centre can configure access authorisation so that the PIN code has to be re-entered each time after someone leaves the truck.

When the driver's seat is occupied again, the message `Log in` 🔒 appears. The display then changes to the "Access authorisation" input menu.

Access authorisation for the fleet manager (variant)

Trucks equipped with the "Access authorisation for the fleet manager" variant are protected against unauthorised configuration by a fleet manager password.

NOTE

Access to the settings menu is only available if the truck is at a standstill and the parking brake is applied. If the parking brake is released prematurely, the settings menu will close.

– Stop the truck.

– Actuate the parking brake.

– Press the button ▤.

– Press the "Settings" Softkey ⚙.

The first menu level appears.

– Press the `Access authorisation` 🔑 Softkey.

The display changes to the "Access authorisation" menu.

– Enter the fleet manager password using the ▷ Softkeys.

– To confirm, push the ▤ button.

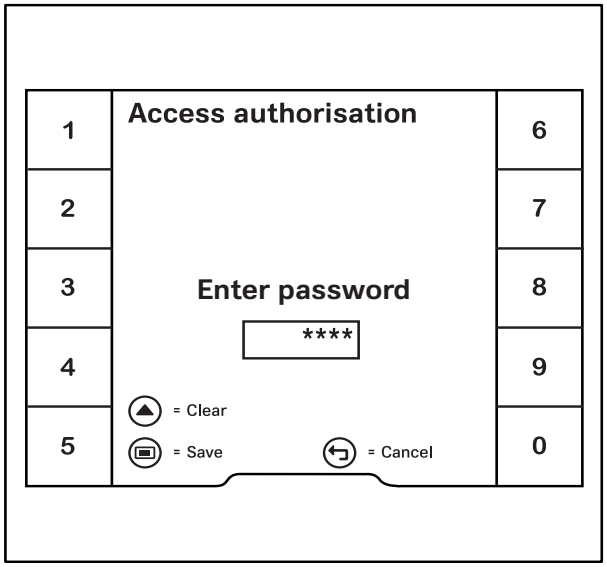

The `Access authorisation fleet manager granted` ✓ message appears. ▷

– To confirm, push the Softkey ✓ .

"Access authorisation for the fleet manager" is activated. The display returns to the settings menu.

If the password entered was incorrect, the message `Password incorrect` is displayed.

– If this happens, enter the password again.

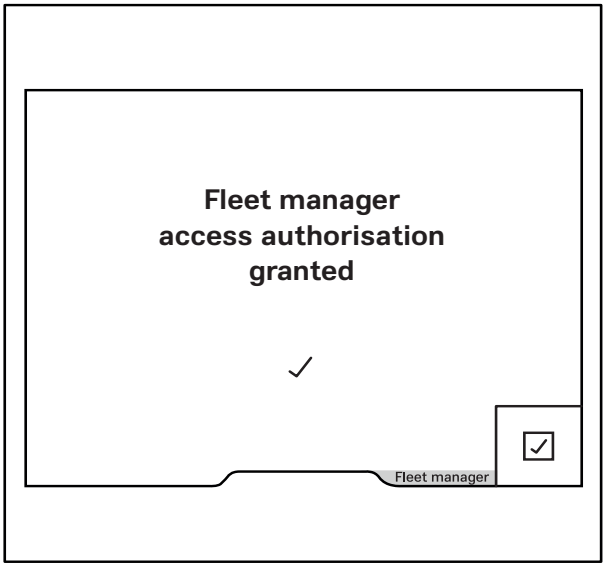

NOTE

While the "Access authorisation for the fleet manager" is activated, `Fleet manager` *is displayed in an orange bar at the bottom of the screen.*

Lighting

Meaning of the symbols ▷

Individual lighting devices are switched on and off using the "Lighting" sub-menu.

– To access this sub-menu, push the button ▤.

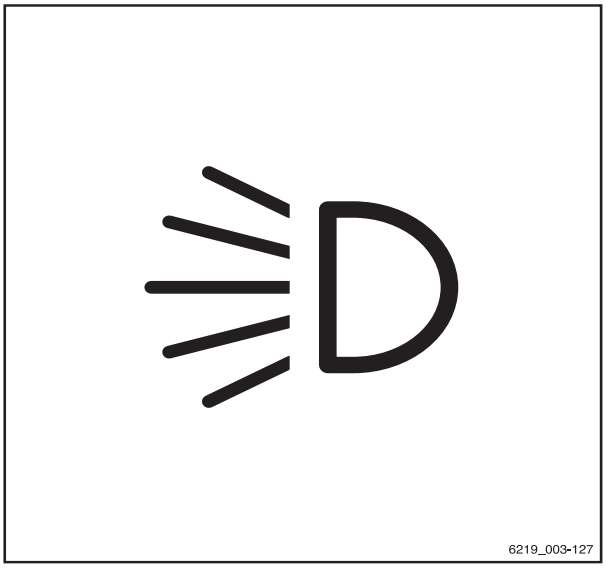

Symbols for the lighting and their meanings

	Parking light
	Headlights
	Hazard warning system[1]
	Rotating beacon
	Front working spotlights
	Rear working spotlight

Only the symbols of the lighting devices that are installed in the truck can be selected. When one of the lighting devices is switched

[1] This function is not available if the truck is equipped with the "StVZO" (German Road Traffic Licensing Regulations) variant. In this case, the hazard warning system is switched on and off via the hazard warning button on the steering column. For more information, refer to the section entitled "Hazard warning system".

on, the activation bar next to the relevant symbol lights up orange.

NOTE

If the truck is equipped with the "StVZO" (German Road Traffic Licensing Regulations) variant, the hazard warning system works even when the truck is switched off.

Driving lights

– To switch on the parking light (1), push the associated Softkey on the display-operating unit.

The front side lights and the rear lights light up.

– To switch on the driving light (2), push the associated Softkey on the display-operating unit.

The headlights light up. For the StVZO (Road Traffic Licensing Regulations) equipment (variant), the licence plate lamp also lights up if the truck is equipped with it.

– To switch off the driving light (2), push the Softkey again.

The driving light and licence plate lamp go out.

– To switch off the parking light (1), push the Softkey again.

The front side lights and the rear lights light up.

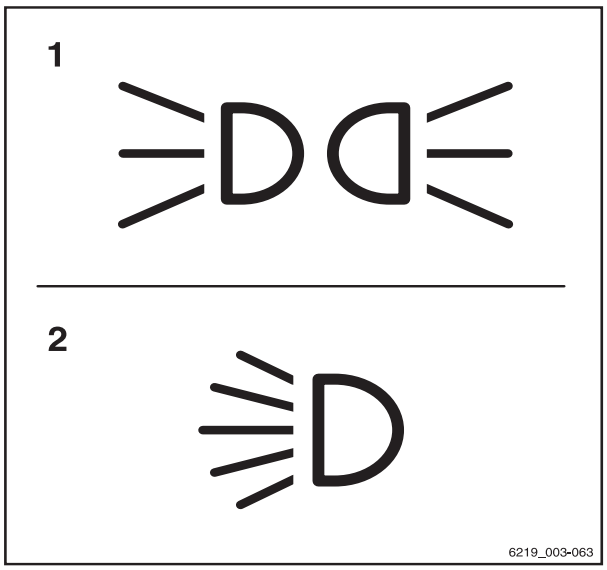

1 Parking light
2 Driving light

Working spotlights

Front and rear working spotlights

– To switch on the front working spotlights (3), push the associated Softkey on the display-operating unit.

The front working spotlights light up.

– To switch off the front working spotlights (3), push the Softkey again.

The front working spotlights go out.

– To switch on the rear working spotlights (4), push the associated Softkey on the display-operating unit.

The rear working spotlights light up.

– To switch off the rear working spotlights (4), push the Softkey again.

The rear working spotlights go out.

NOTE

For the StVZO (German Road Traffic Licensing Regulations) variant, the parking light is also switched on when the working spotlights are switched on. The licence plate lamp (if present) is also switched on when the forward-facing working spotlights are switched on.

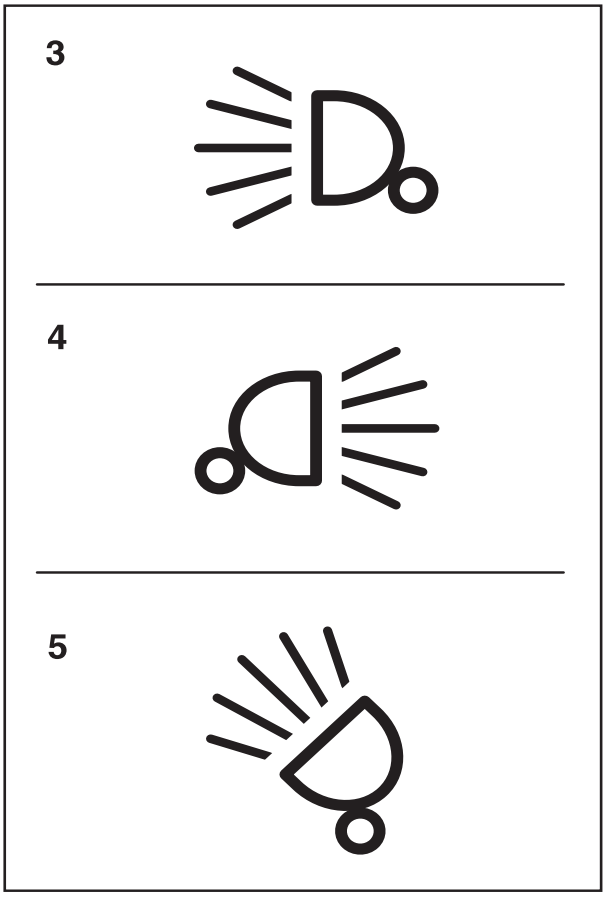

3 Front working spotlights
4 Rear working spotlights
5 Roof spotlights

Working spotlights on the roof and the side of the lift mast

The roof spotlights light up the working area when the fork carriage is raised.

– To switch on the roof spotlights (5), push the associated Softkey on the display-operating unit.

The roof spotlights (5) light up.

– To switch off the roof spotlights (5), push the Softkey again.

The roof spotlights (5) go out.

NOTE

Depending on the configuration, the roof spotlights automatically switch on when the fork carriage is raised.

Working spotlight for reverse travel (variant)

In this equipment variant, a working spotlight for reverse travel is fitted on the rear of the overhead guard and provides optimum illumination of the roadway during reverse travel.

– Press the softkey.

The activation bar next to the symbol lights up. The working spotlight does not yet light up.

– Set the drive direction to "Reverse".

The working spotlight for reverse travel lights up.

If the drive direction is set to "Forward", the working spotlight goes out.

Turn indicators

The turn indicators are switched on and off via the mini-console.

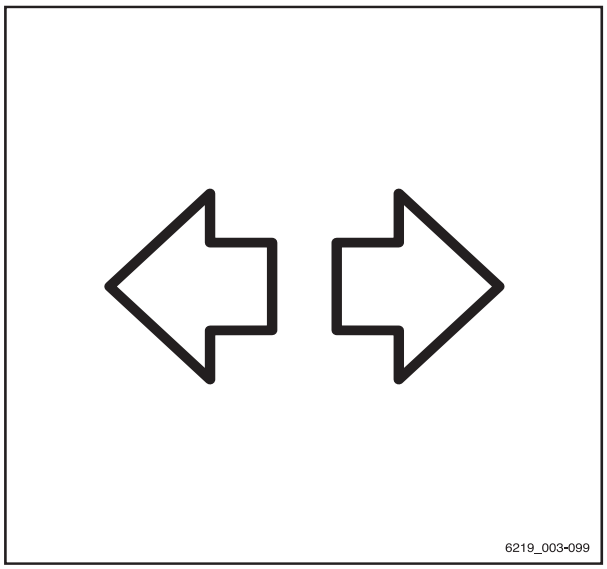

– To switch on the left or right turn indicator, move the lever (1) to the desired direction.

The turn indicators and the turn indicator displays on the display/operating unit flash.

– To switch off the turn indicators, push the lever (1) back to the centre position.

All turn indicators and the turn indicator displays on the display/operating unit stop flashing.

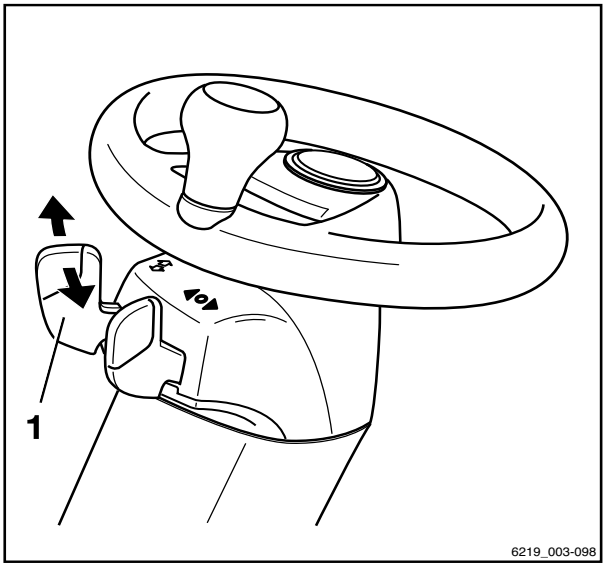

Hazard warning system

Switching the hazard warning system on and off is different for trucks with and without the StVZO (German Road Traffic Licensing Regulations) variant.

– To switch on the hazard warning system, push the associated Softkey on the display-operating unit.

All direction indicators and the turn indicator displays on the display-operating unit flash.

– To switch off the hazard warning system, push the Softkey again.

All direction indicators and the turn indicator displays on the display-operating unit stop flashing.

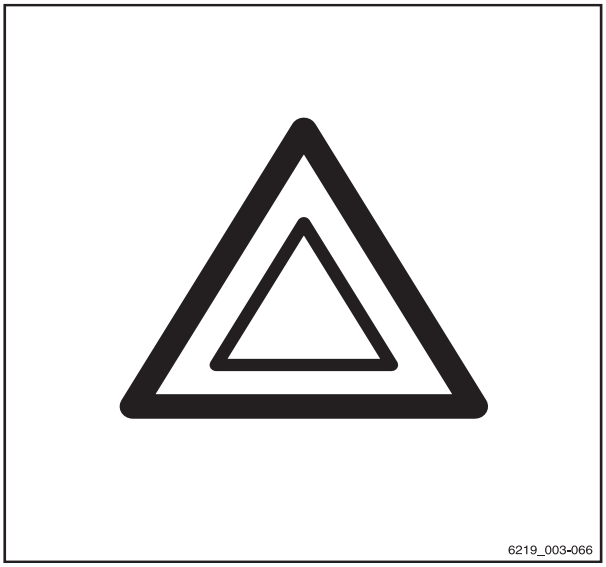

Specific features of the StVZO (German Road Traffic Licensing Regulations) variant ▷

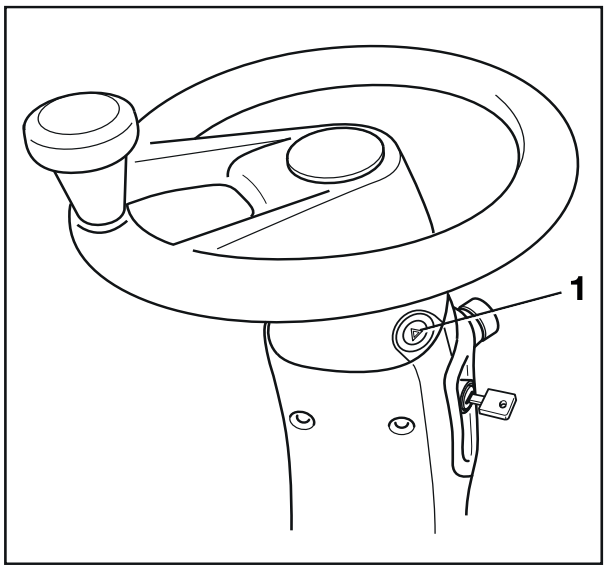

For the StVZO (German Road Traffic Licensing Regulations) variant, the hazard warning system cannot be switched on and off via the display/operating unit. It is switched on and off using the hazard warning button on the steering column. The hazard warning system in this variant works even when the truck is switched off.

– To switch on the hazard warning system, push the hazard warning button (1).

All direction indicators and the turn indicator displays on the display/operating unit flash.

– To switch off the hazard warning system, push the hazard warning button (1) again.

All direction indicators and the turn indicator displays on the display-operating unit stop flashing.

Rotating beacon ▷

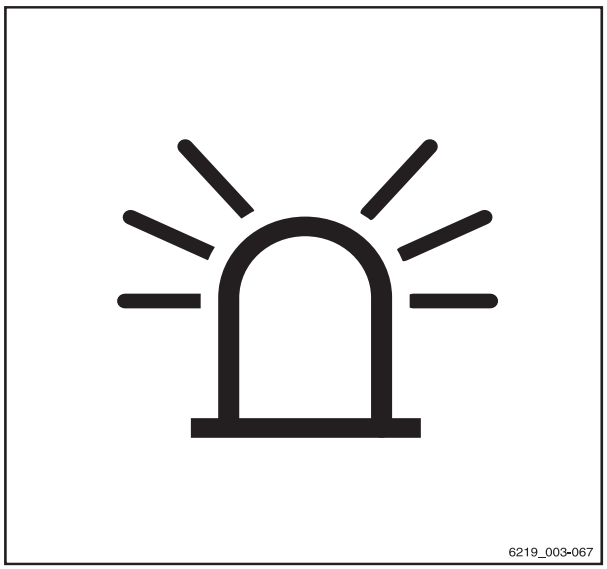

– To switch on the rotating beacon, push the associated Softkey on the display-operating unit.

The rotating beacon is switched on.

– To switch off the rotating beacon, push the Softkey again.

The rotating beacon goes out.

STILL SafetyLight (variant)

WARNING

Danger of eye damage if looking into the STILL SafetyLight.

Do not look into the STILL SafetyLight.

The STILL SafetyLight is a visual warning unit to enable early detection of trucks in driving areas with low visibility (such as drive lanes, high racks), as well as at blind junctions. The STILL SafetyLight is mounted on a support on the overhead guard such that it is not affected by jolts and vibrations. The STILL SafetyLight projects one or more light-blue light spots in front of or behind the truck and thus warns others about the approaching truck. Several light spots are projected as a chase light. The chase light indicates the location of the truck with its direction of travel.

Depending on the configuration of the truck, the STILL SafetyLight automatically switches itself on when the truck is moving. The STILL SafetyLight can also be switched on and off on the display-operating unit.

– To do so, push the Softkey .

NOTE

If the truck is to be operated on public roads, the STILL SafetyLight must be switched off.

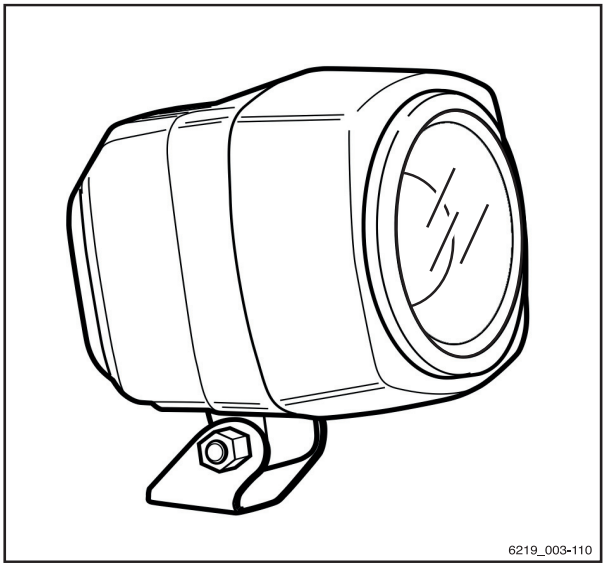

Efficiency and drive modes

Blue-Q (variant)

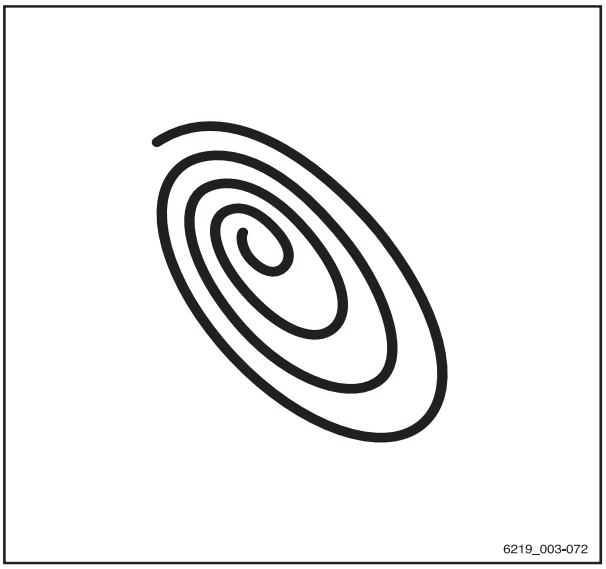

Functional description

The Blue-Q efficiency mode affects both the drive unit and the activation of the additional consumers, and reduces the truck's energy consumption. Blue-Q can be switched on and off via a softkey.

If efficiency mode is switched on, the acceleration behaviour of the truck changes to make acceleration more moderate.

When travelling at low speeds, normally when manoeuvring, no reduction is noticeable even if efficiency mode is switched on. For moderate speeds from approx. 7 km/h, acceleration is gentler. Therefore, on distances of up to approx. 40 m, lower speeds are reached than would be the case if the efficiency mode was not activated. As in "STILL Classic" mode, the maximum speed is 20 km/h.

has no influence on:

- Maximum speed
- Climbing capability
- Pulling force
- Braking characteristics

Effects on additional consumers

The following table shows the specific conditions that cause certain auxiliary devices to shutdown when Blue Q is activated. The additional consumers available depend on the truck equipment.

Shut-off	Seat switch	Truck is stationary	Drive direction
Front working spotlight*	X	X	Reverse > 3 km/h
Rear working spotlight*	X	X	Forwards
Roof spotlight*	X	X	> 3 km/h
Headlight*	X	X	-
Front wiper	X	X	Reverse > 3 km/h
Rear wiper	X	X	Forwards
Roof wiper	X	X	-
Seat heater	X	-	-

Shut-off	Seat switch	Truck is stationary	Drive direction
Cab heating	X	-	-
Screen heating	X	-	-
*No shut-off for StVZO (German Road Traffic Licensing Regulations) equipment (variant)			

Switching Blue-Q on and off

– To switch on Blue-Q efficiency mode, push the associated softkey.

The Blue-Q symbol appears on the display/operating unit and Blue-Q efficiency mode is switched on.

– To switch off Blue-Q efficiency mode, push the associated softkey again.

The Blue-Q symbol disappears and Blue-Q efficiency mode is switched off.

STILL Classic and sprint mode

Drive modes influence the driving performance and the lifting performance of the electric drive.

Two different drive modes are available:

1 **STILL Classic**
This mode is active after the truck has been switched on. This mode is the default setting and provides a balance between hydraulic functions and driving functions. The maximum speed is 20 km/h. No symbol is shown on the display.

2 **Sprint mode**
In sprint mode, the truck accelerates more quickly to a maximum speed of 20 km/h. This mode also increases the lifting speed. Sprint mode is for driving on clear and spacious terrain.

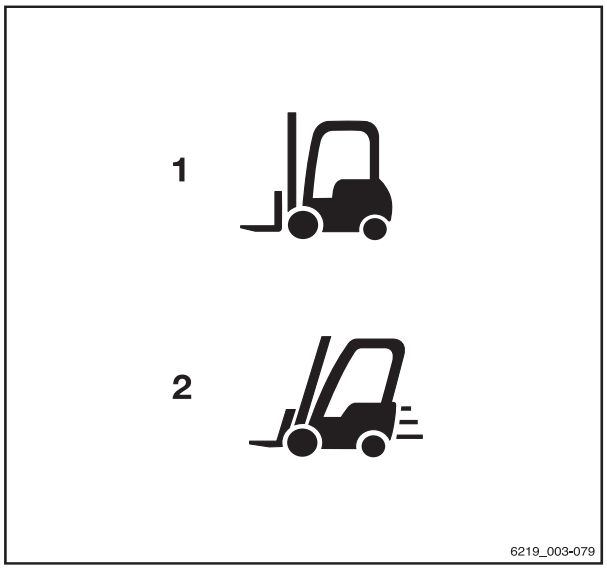

NOTE

If sprint mode is used, the truck's energy consumption is higher. The battery is therefore discharged more quickly. The drive units heat up more quickly.

Switching sprint mode on and off

– To switch on sprint mode, push the associated softkey.

The "sprint mode" symbol (2) appears on the display of the display-operating unit. Sprint mode is switched on.

– To switch off the mode, push the softkey again.

The symbol disappears and the mode is switched off. The truck is then back in STILL Classic mode.

Automatic switch off for sprint mode

If the truck is operated in sprint mode at the maximum performance level, the truck will consume more energy. As a result, the battery is discharged faster and the traction drives and energy supply may become too hot.

The battery voltage and the temperature of the traction drives and energy supply are monitored continuously. If under voltage (does not apply to lithium-ion batteries) or overheating occurs, sprint mode is automatically deactivated.

If the truck is automatically switched off, sprint mode can then only be switched on again if the following conditions are met:

- The battery is fully recharged.
- The truck has been restarted.

Driving

Safety regulations when driving

Driving conduct

The driver must follow the public rules of the road when driving in company traffic.

The speed must be appropriate to the local conditions.

For example, the driver must drive slowly around corners, in tight passageways, when driving through swing-doors, at blind spots, or on uneven surfaces.

The driver must always maintain a safe braking distance from vehicles and persons in front, and must always have the truck under control. Stopping suddenly, turning quickly and overtaking at dangerous or blind spots must be avoided.

– Initial driving practice must be carried out in an empty space or on a clear roadway.

The following are forbidden during driving:

- Allowing arms and legs to hang outside the truck
- Leaning the body over the outer contour of the truck
- Climbing out of the truck
- Moving the driver's seat
- Adjusting the steering column
- Releasing the seat belt
- Disabling the restraint system
- Raising the load higher than 300 mm above the ground (with the exception of manoeuvring processes during the placement into stock/removal from stock of loads)
- Using electronic devices, for example radios, mobile phones etc.

⚠ WARNING

The use of multimedia and communication equipment as well as playing these devices at an excessive volume during travel or when handling loads can affect the operator's attention. There is a risk of accident!

– Do not use devices during travel or when handling loads.
– Set the volume so that warning signals can still be heard.

⚠ WARNING

In areas where use of mobile phones is prohibited, use of a mobile phone or radio telephone is not permitted.

– Switch off the devices.

Visibility when driving

The driver must look in the drive direction and have a sufficient view of the driving lane.

Particularly for reverse travel, the driver must be sure that the driving lane is clear.

When transporting goods that impair visibility, the driver must drive the truck in reverse.

If this is not possible, a second person acting as a guide must walk in front of the truck.

In this case the driver must only move at walking pace and with extra care. The truck must be stopped immediately if eye contact with the guide is lost.

Rear-view mirrors are only to be used for observing the road area behind the truck and not for reverse travel. If visual aids (mirror, monitor) are necessary to achieve sufficient visibility, it is necessary to practise using them. For reverse travel using visual aids, extra care should be taken.

When using attachments, special conditions apply; see the chapter entitled "Fitting attachments".

Any glass (variant, e.g. windscreen) and mirrors must always be clean and free of ice.

Roadways

Dimensions of roadways and aisle widths

The following dimensions and aisle width requirements apply under the specified conditions to ensure safe manoeuvring. In each case, a check must be performed to determine whether a larger aisle width is necessary, e.g. in the case of deviating load dimensions, attachments, lift masts and tow couplings.

Within the EU, "Council Directive 89/654/EEC concerning the minimum safety and health requirements for the workplace" must be observed. The respective national guidelines apply for areas outside the EU.

The required aisle widths depend on the dimensions of the load.

Required aisle widths with pallet

Model	Type	Aisle width [mm]	
		With pallet 1000x1200 crosswise	With pallet 800x1200 lengthwise
RX20-14C	6219	3186	3311
RX20-16C	6220	3186	3311
RX20-16	6221	3269	3394
RX20-16L	6222	3377	3502
RX20-18	6223	3269	3394
RX20-18L	6224	3377	3502
RX20-20L	6225	3390	3516
RX20-16P	6226	3362	3487
RX20-16PL	6227	3470	3595
RX20-18P	6228	3362	3487
RX20-18PL	6229	3470	3595
RX20-20P	6230	3375	3501
RX20-20PL	6231	3483	3609

The truck may only be used on driveways that do not have curves that are too tight, have gradients that are too steep, and entrances that are not too narrow or low.

Driving on ascending and descending gradients

WARNING

Risk of accident due to the drive unit switching off!

Driving up and down longer gradients may cause the drive unit to overheat and switch off. The truck will then no longer decelerate when the accelerator pedal is released and will coast.

Driving up and down longer gradients greater than 15% is not permitted due to the minimum specified braking values. The climbing capability values given below only apply to overcoming obstacles on the roadway and to short differences in level, e.g. ramps.

– Consult the authorised service centre before driving on long ascending and descending gradients greater than 15%.

CAUTION

Risk of component damage due to reduced ground clearance with the "hydraulic battery carrier" variant.

Trucks fitted with a hydraulic battery carrier (variant) have a reduced ground clearance, and the permitted climbing capability is therefore reduced. Irregularities in the ground, such as railway sleepers, must also be driven over with caution.

– Please note the following:

- The ground clearance is restricted
- When using worn tyres, the maximum ramp angle is only 7°

NOTE

The values specified in the "Maximum climbing capability" table can be used only to compare the performance of forklift trucks in the same category. The specified values in no way represent the normal daily operating conditions.

Trucks can theoretically be driven on the ascending and descending gradients in the following table.

Maximum climbing capability

Model	Type	Maximum climbing capability [%]	
		With load	Without load
RX20-14C	6219	30.3	27.9
RX20-16C	6220	27.6	26.0
RX20-16	6221	28.0	27.4
RX20-16L	6222	27.4	28.7
RX20-18	6223	25.1	26.0
RX20-18L	6224	25.3	28.3
RX20-20L	6225	23.0	26.9
RX20-16P	6226	27.8	27.8
RX20-16PL	6227	27.6	28.9
RX20-18P	6228	24.8	26.0
RX20-18PL	6229	25.4	28.6
RX20-20P	6230	22.9	25.1
RX20-20PL	6231	23.1	27.2

Legend for model

C	Compact
L	Long
P	Swing axle version

The ascending and descending gradients must not exceed the gradients listed above and must have a rough surface.

The top and bottom of the gradient must feature smooth and gradual transitions to prevent the load from falling to the ground or the truck being damaged.

Warning in the event that components protrude beyond the truck contour

Trucks are often required to drive through very narrow or very low spaces such as aisles or containers. The dimensions of the trucks are designed for this purpose. However, movable components may protrude beyond the truck

contour and be damaged or torn off. Examples of these components are:

- An unfolded roof panel in the driver's cab
- Open cab doors

Condition of the roadways

Roadways must be sufficiently firm and even. The surface must be free from contamination and fallen objects.

Drainage channels, level crossings and similar obstacles must be evened out and, if necessary, ramps must be provided so that trucks can drive over these obstacles with as few bumps as possible.

Take note of the load capacity of manhole covers, drain covers etc.

There must be sufficient distance between the highest points of the truck or the load and the fixed elements of the surrounding area. The height is based on the overall height of the lift mast and the dimensions of the load; see the chapter entitled "Technical data".

Rules for roadways and the working area

It is only permitted to drive on routes authorised for traffic by the operating company or its representatives. Traffic routes must be free from obstacles. The load may be set down and stored only in the designated locations. The operating company and its representatives must ensure that unauthorised third parties do not enter the working area.

NOTE

Please observe the definition of the following responsible person: "operating company".

Hazard areas

Hazard areas on roadways must be marked by standard traffic signs or, if necessary, by additional warning signs.

Selecting drive programmes 1 to 3

The truck has three drive programmes with different preset driving and braking characteristics. The basic principle is that the higher the number of the drive programme selected, the greater the driving dynamics.

The drive programme is selected using the display-operating unit under the "Drive" menu item.

– Press the 1... softkey to select the desired drive programme. 3 drücken.

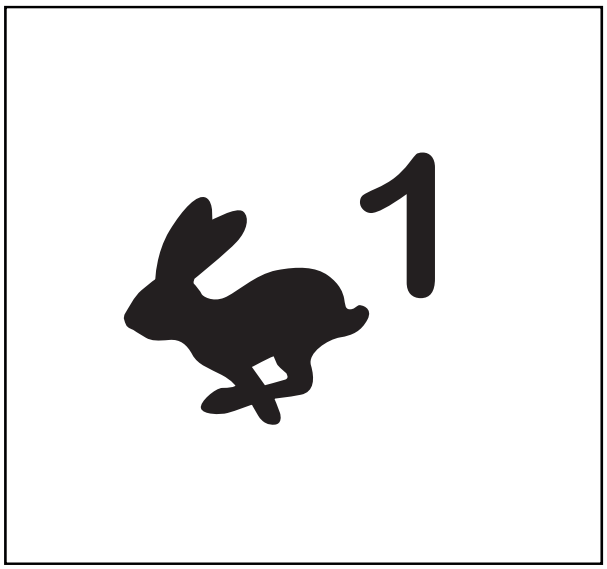

– If the drive programmes are saved as a favourite on a softkey, press the "Drive programme" softkey until the number of the desired drive programme is shown on the display.

The number of dynamic bar segments indicates the driving dynamics of the selected drive programme.

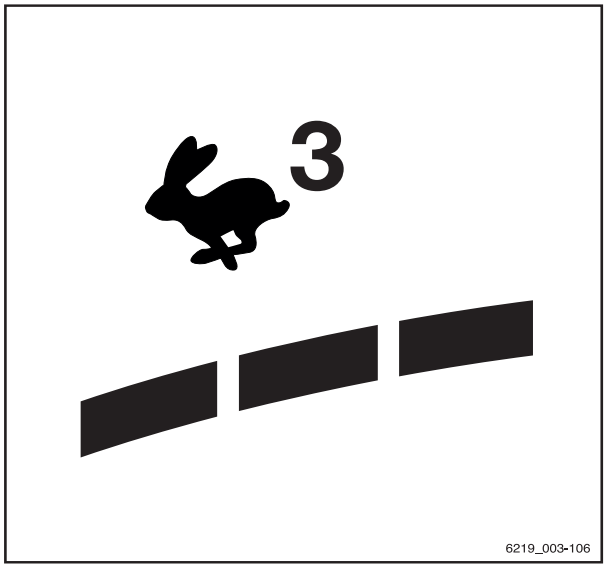

Selecting drive programme A or B

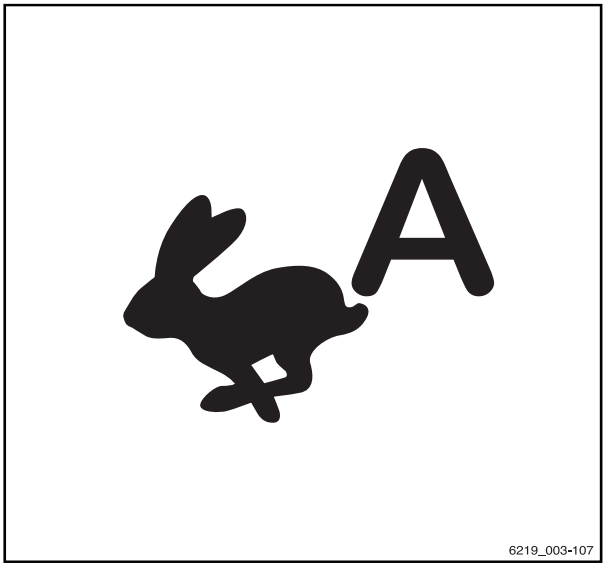

The truck has two drive programmes with different handling and braking characteristics.

Unlike the fixed drive programmes "1 to 3", the programs "A" and "B" can be configured. The procedure for this is described in the following section.

The drive programme is selected using the display-operating unit under the "Drive" menu item.

– Press the A or B softkey to select the desired drive programme.

– If the drive programmes are saved as a favourite on a softkey, press the "Drive programme" Softkey until the letter of the desired drive programme is shown on the display.

Configuring drive programmes A and B

The drive programmes can be configured by the driver.

NOTE

Access to the settings menu is only available if the truck is at a standstill and the parking brake is applied. If the parking brake is released prematurely, the settings menu will close.

– Stop the truck.

– Actuate the parking brake.

– Press the button .

The first menu level appears.

– Press the "Settings" softkey .

– Press the `Truck settings` softkey .

– Press the `Drive programmes` softkey.

The "drive programme" menu appears.

– Press the associated softkey for `drive programme A` or `drive programme B`.

Configuring the drive programs using the "drive programme A" is explained here.

The menu **Set drive programme A** appears. ▷

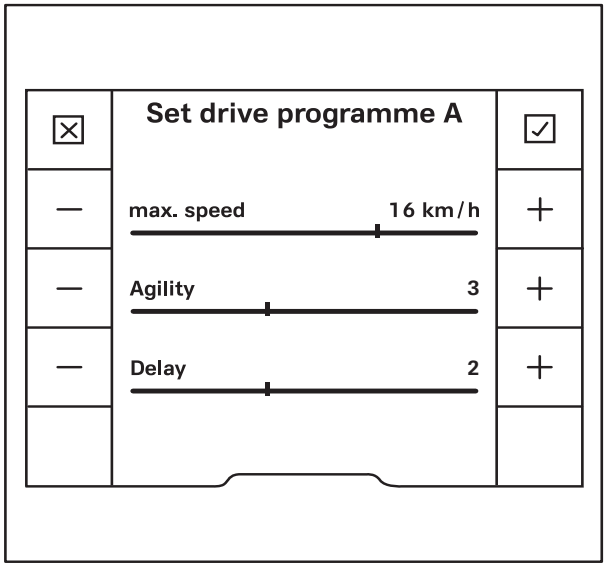

The following parameters can be set:

- `Max. speed`
  Determines the maximum speed (max. 20 km/h).
- `Agility`
  Determines the acceleration behaviour and the reversing behaviour using five levels.
  "1" indicates the lowest agility and "5" indicates the greatest agility
- `Delay`
  Determines the delay using five levels.
  "1" indicates the lowest delay and "5" indicates the greatest delay

– To select a higher level, press the appropriate "plus" ＋ softkey.

– To select a lower level, press the appropriate "minus" － softkey.

– To save the setting, press the "confirm" ☑ Softkey.

The settings are saved.

– To cancel the setting, press the "cancel" ☒ Softkey.

The settings return to the most recently saved value.

Press the button ↰ once to return to the previous menu level.

Selecting the drive direction

The drive direction of the truck must be selected using the drive direction switch before attempting to drive. The method of actuating the drive direction switch depends on the operating devices included in the truck's equipment.

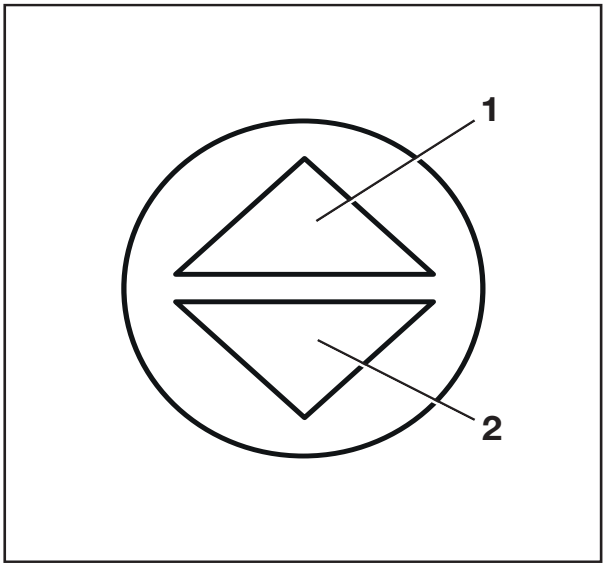

NOTE

The drive direction can also be changed during travel. Your foot can remain on the accelerator pedal while you do so. The truck is then decelerated and accelerated again in the opposite direction (reversing).

The indicator for the selected drive direction ("forwards" (1) or "backwards" (2)) lights up on the display-operating unit.

Neutral position

If leaving the truck for a prolonged period, the neutral position must be selected in order to avoid the truck suddenly moving off due to an inadvertent actuation of the accelerator pedal.

– Briefly select the drive direction switch for the direction opposite to the current drive direction.

The drive direction indicator on the display-operating unit goes out.

NOTE

When the seat is vacated, the selected drive direction is set to the "neutral position". To drive, the drive direction switch must be actuated again.

Actuating the drive direction switch, multiple-lever version

▷

- For the "forwards" drive direction, push the drive direction switch (1) downwards.
- For the "backwards" drive direction, push the drive direction switch (1) upwards.

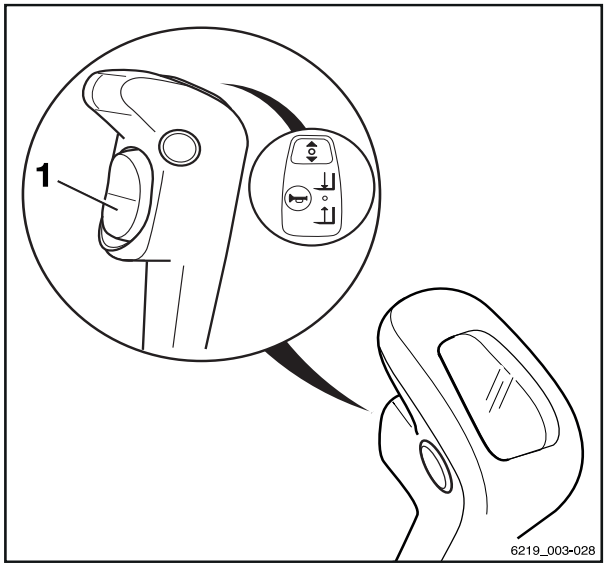

Actuating the drive direction switch, mini-lever version

▷

- For the "forwards" drive direction, push the drive direction switch (1) forwards.
- For the "backwards" drive direction, push the drive direction switch backwards.

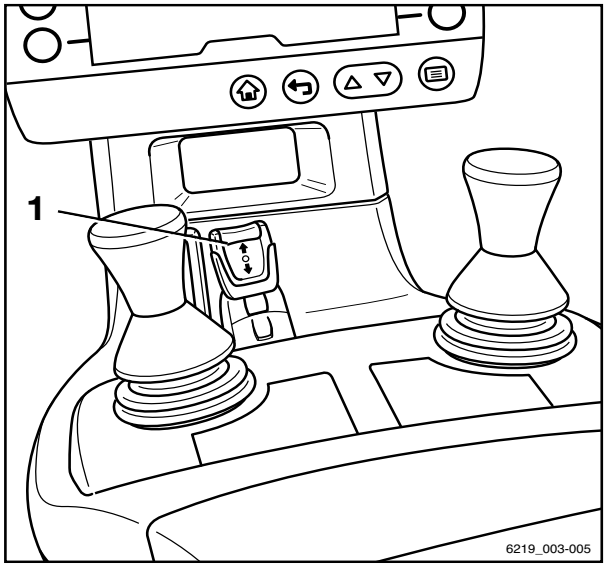

Actuating the drive direction switch, Fingertip version

- For the "forwards" drive direction, push the drive direction switch (1) forwards.
- For the "backwards" drive direction, push the drive direction switch backwards.

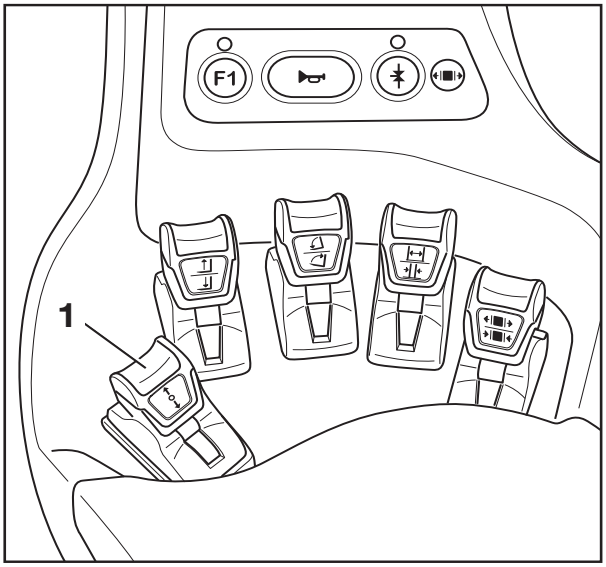

Actuating the vertical rocker switch for the "drive direction", joy-stick 4Plus version

- For the "forwards" drive direction, push the vertical rocker button for the "drive direction"(1) upwards (A).
- For the "reverse" drive direction, push the vertical rocker button for the "drive direction"(1) downwards (B).

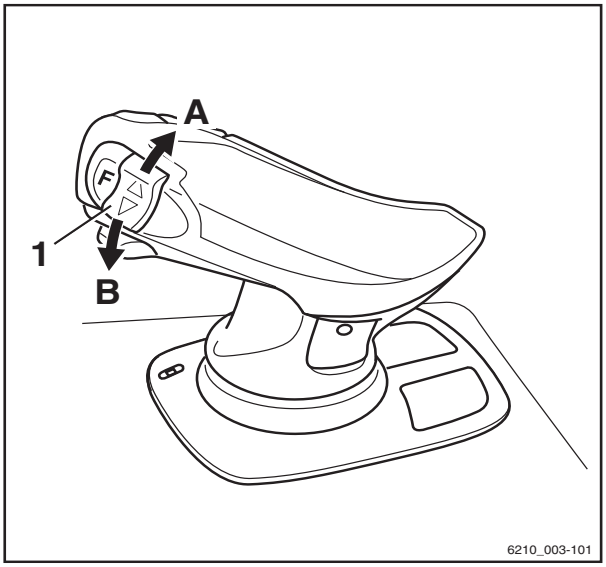

Actuating the drive direction switch, mini-console version

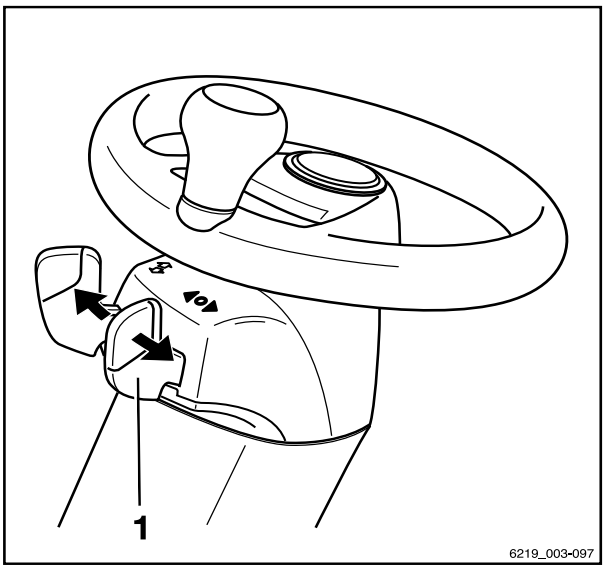

- For the "forwards" drive direction, push the drive direction switch (1) forwards
- For the "backwards" drive direction, push the drive direction switch (1) backwards.

NOTE

Alternatively, the drive direction can also be selected using the drive direction switches on the operating devices.

Starting drive mode

DANGER

Being trapped under a rolling or tipping truck could cause fatal injuries!

- Sit on the driver's seat.
- Fasten the seat belt.
- Activate the available restraint systems.

- Observe the information in the chapter entitled "Safety regulations when driving".

The driver's seat is equipped with a seat switch. This seat switch checks whether the driver's seat is occupied. If the driver's seat is not occupied or if the seat switch is malfunctioning, the truck cannot be moved and all lifting functions are locked. In these situations, the message `Sit in the driver's seat` is shown on the display of the display-operating unit.

- Sit on the driver's seat. Fasten the seat belt.
- Lift the fork carriage until the necessary ground clearance is achieved.
- Tilt the lift mast backwards.
- Release the parking brake.
- Select the desired drive direction.

The indicator for the selected drive direction ("forwards" (1) or "reverse" (2)) lights up on the display-operating unit.

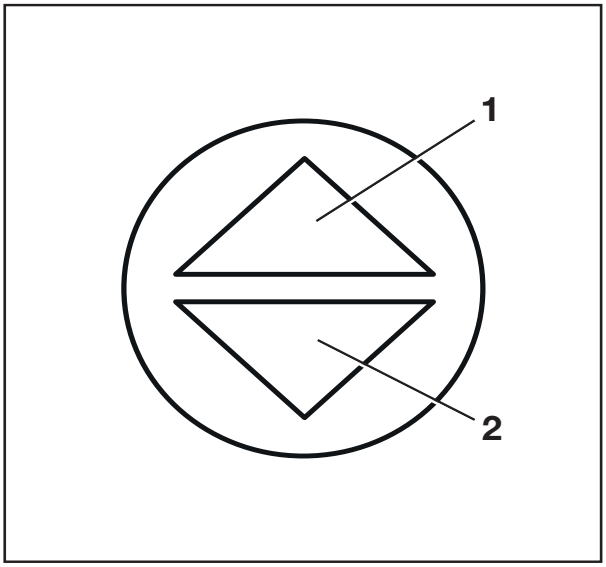

NOTE

Different warning signals can be emitted to indicate reverse travel depending on the equipment; an acoustic signal (variant) may sound, the warning light (variant) may light up or the hazard warning system (variant) may flash.

– Press the accelerator pedal (3).

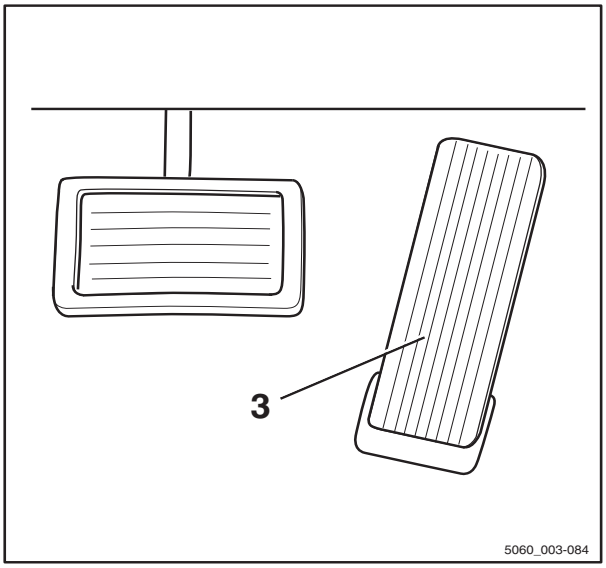

The truck will travel in the selected drive direction. The speed is controlled by the accelerator pedal position. The truck brakes when the accelerator pedal is released.

NOTE

The truck is also held in place on ascending or descending gradients even if the electric parking brake is not engaged.

DANGER

Risk of accident due to brake failure!

The regenerative brake only functions if the truck is switched on, the emergency off switch has not been actuated and the parking brake is released.

– Use the brake pedal if the regenerative brake malfunctions.
– Engage the parking brake before leaving the truck.

Changing the drive direction

– Take your foot off the accelerator pedal.
– Select the desired drive direction.
– Press the accelerator pedal.

The truck will travel in the selected drive direction.

NOTE

The drive direction can also be changed during travel. Your foot can remain on the accelerator pedal while you do so. The truck is then decelerated and accelerated again in the opposite direction (reversing).

NOTE

If an electrical fault occurs in the accelerator, the drive unit is switched off. In this situation, the truck is not electrically braked. Once the electrical fault has been corrected, it will be possible to drive the truck again by releasing the accelerator pedal and then actuating the accelerator pedal again. If the truck still cannot be operated, park the truck securely and contact the authorised service centre.

Starting drive mode, dual pedal version (variant)

DANGER

Being trapped under a rolling or tipping truck could cause fatal injuries!

- Sit on the driver's seat.
- Fasten the seat belt.
- Activate the available restraint systems.

- Observe the information in the chapter entitled "Safety regulations when driving".

The driver's seat is equipped with a seat switch. This seat switch checks whether the driver's seat is occupied. If the driver's seat is not occupied or if the seat switch is malfunctioning, the truck cannot be moved and all lifting functions are locked. In these situations, the message `Sit in the driver's seat` is shown on the display of the display-operating unit.

- Sit on the driver's seat. Fasten the seat belt.
- Lift the fork carriage until the necessary ground clearance is achieved.
- Tilt the lift mast backwards.
- Release the parking brake.

– Press the right accelerator pedal (1) for the "forwards" drive direction and press the left accelerator pedal (2) for the "backwards" drive direction.

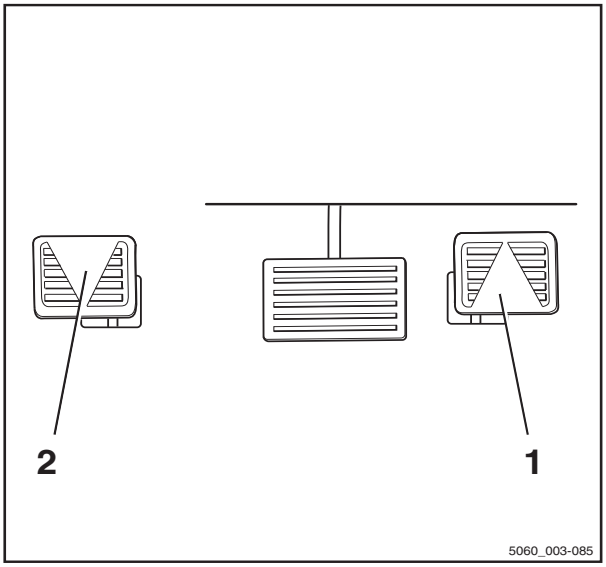

NOTE

In the dual pedal version, the drive direction switches on the operating devices do not function.

The indicator for the selected drive direction ("forwards" (1) or "reverse" (2)) lights up on the display-operating unit.

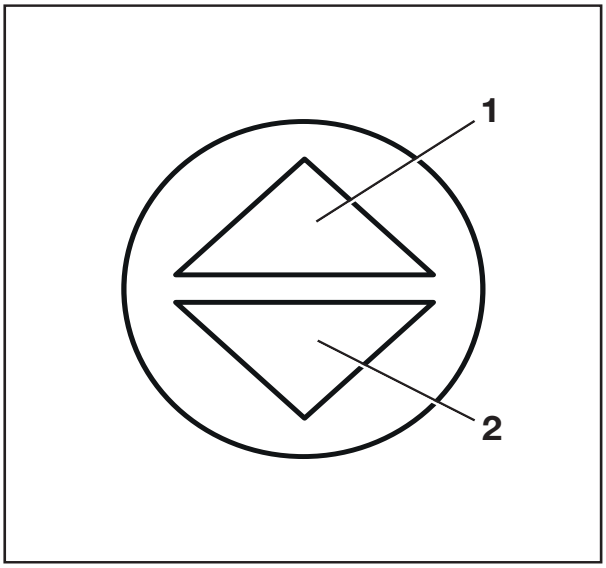

NOTE

Different warning signals can be emitted to indicate reverse travel depending on the equipment; an acoustic signal (variant) may sound, the warning light (variant) may light up or the hazard warning system (variant) may flash.

The truck will travel in the selected drive direction. The speed is controlled by the accelerator pedal position. The truck brakes when the accelerator pedal is released.

NOTE

The truck is also held in place on ascending or descending gradients even if the electric parking brake is not engaged.

DANGER

Risk of accident due to brake failure!

The regenerative brake only functions if the truck is switched on, the emergency off switch has not been actuated and the parking brake is released.

– Use the brake pedal if the regenerative brake malfunctions.
– Engage the parking brake before leaving the truck.

Changing the drive direction

- Remove your foot from the actuated accelerator pedal.
- Press down the accelerator pedal for the opposite direction.

The truck will travel in the selected drive direction.

NOTE

If an electrical fault occurs in the accelerator, the drive unit is switched off. In this situation, the truck is not electrically braked. Once the electrical fault has been corrected, it will be possible to drive the truck again by releasing the accelerator pedal and then actuating the accelerator pedal again. If the truck still cannot be operated, park the truck securely and contact the authorised service centre.

Operating the service brake

The electric brake converts the acceleration energy of the truck into electrical energy. This causes the truck to decelerate.

Electrical braking recovers energy for the battery. This results in a longer operating time between charging operations and less wear to the brakes.

The truck can also be braked with the mechanical brake by actuating the brake pedal (2). In the first section of the brake pedal's travel, only the electric brake takes effect. As the pedal is depressed further, the mechanical brake is also activated and acts on the drive wheels

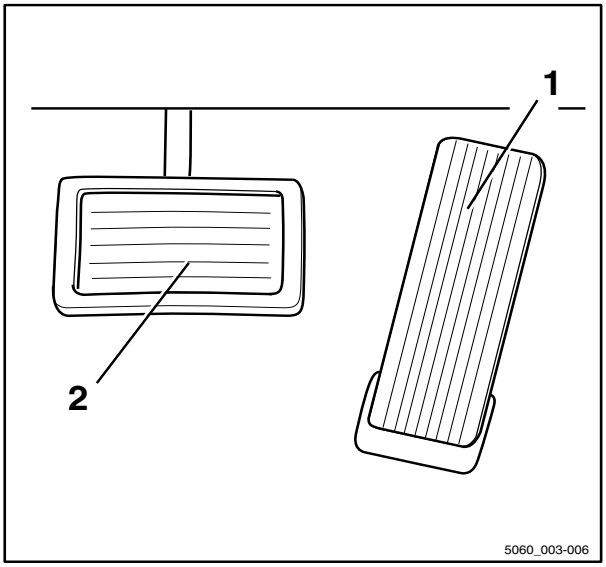

DANGER

If the service brake fails, the truck cannot brake sufficiently. There is a risk of accident!

If the driver notices that the electrical braking effect has reduced by 50% and that the drive torque has decreased to 50% of the normal level, a component failure may have occurred.

- Bring the truck to a standstill using the brakes. Use the parking brake if necessary to assist in this process.
- Notify the authorised service centre.
- Do not operate the truck again until the service brake has been repaired.

DANGER

At speeds that are too high, there is a danger that the truck could slip or overturn!

The braking distance of the truck depends on the weather conditions and the level of contamination on the roadway. Note that the basic braking distance increases with the square of the speed.

- Adapt your driving and braking style to suit the weather conditions and the level of contamination on the roadway.
- Always choose a driving speed that will provide a sufficient stopping distance.

- Brake the truck by releasing the accelerator pedal (1).
- If the braking effect is inadequate, use the brake pedal (2) as well to apply the mechanical brake.

Parking brake

Operation of the parking brake depends on which parking brake the truck is fitted with.

Possible equipment variants are as follows:

- Mechanical parking brake; see ⇒ Chapter "Applying the mechanical parking brake", P. 4-130
- Electric parking brake; see ⇒ Chapter "Actuating the electric parking brake (variant)", P. 4-132

Applying the mechanical parking brake

DANGER

There is a risk of fatal injury from being run over if the truck rolls away.

– The truck must not be parked on a slope.

– In emergencies, secure the truck using wedges on the side facing downhill.

– Only leave the truck when the parking brake has been applied.

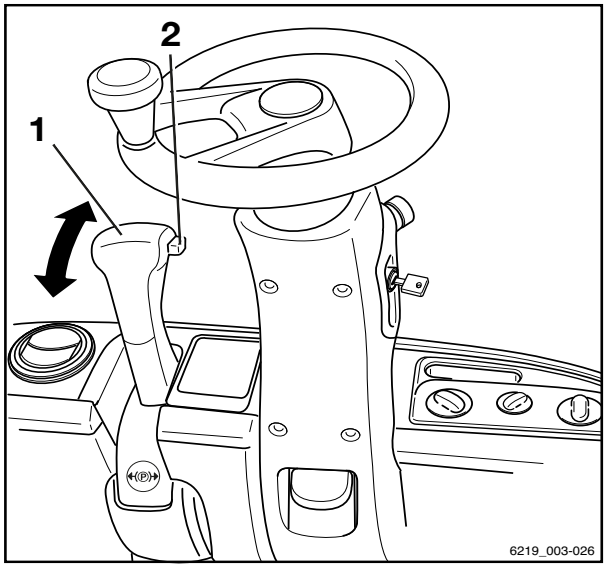

Applying the parking brake

– Pull the parking brake lever (1) back fully and release it.

The parking brake lever engages. The parking brake is applied. The wheels on the drive axle are blocked. The message `Parking brake active` appears briefly on the display of the display-operating unit. The "parking brake" symbol Ⓟ appears on the display in place of the speed information.

Releasing the parking brake

– Pull the parking brake lever (1) back.

– Push down the knob (2) and hold it down.

– Move the parking brake lever (1) forwards and release both the lever and the knob.

The parking brake is released.

NOTE

The parking brake lever swivels to the forward position automatically via spring force and requires only gentle manual guidance. If the movement of the parking brake is stiff, notify the authorised service centre.

After the parking brake has been released, the previously selected drive direction is retained and is shown on the drive direction indicator.

"Safe parking" function (variant)

This function monitors the braking effect after the truck is parked. If a sensor is fitted on the lift mast (variant), it also checks whether the fork carriage is lowered.

This function alerts the driver with an audible signal if:

- The driver leaves the driver's seat without applying the parking brake
- The driver leaves the driver's seat without lowering the fork carriage (variant)
- The driver attempts to switch off the truck without applying the parking brake
- The truck starts moving approximately 20 seconds after the parking brake is applied

Activation and intervention of the function

Cause	Effect
The driver's seat is vacated and the parking brake has not been applied.	A warning signal sounds. Sitting in the driver's seat silences the warning signal.
The truck needs to be switched off but the parking brake has not been applied.	The truck cannot be switched off. A warning signal sounds. Applying the parking brake silences the warning signal.
The parking brake has been applied but has not been applied correctly as a result of a malfunction The driver's seat is vacated.	A warning signal sounds. Sitting in the driver's seat silences the warning signal. Use wedges to prevent the truck from rolling away. Notify the authorised service centre.
The truck needs to be switched off. The parking brake has been applied but has not engaged correctly as a result of a malfunction.	The truck cannot be switched off. A warning signal sounds. Use wedges to prevent the truck from rolling away. Notify the authorised service centre.

DANGER

Risk of fatal injury from being run over if the truck rolls away!

If the parking brake is faulty, park the truck safely and secure it so that it cannot roll away.

- If necessary, use wedges to prevent the truck from rolling away.
- Have the parking brake repaired by an authorised service centre.

Actuating the electric parking brake (variant)

DANGER

There is a risk of fatal injury from being run over if the truck rolls away.

- Do not park the truck on a gradient.
- Do not leave the truck until the parking brake has been applied.
- In an emergency, secure the truck with wedges on the downhill-facing side to prevent it from rolling away.

This truck is equipped with an electric parking brake. The parking brake does not need to be applied when the driver leaves the truck. It is applied automatically.

Despite these automatic aids, the driver is always responsible for parking the truck safely. The safety information about parking the truck safely applies.

NOTE

The electric parking brake can be activated or released only when the battery male connector is connected ***and*** *the truck is switched on.*

If the parking brake is applied, this is indicated by a symbol in place of the driving speed on the display-operating unit.

▷

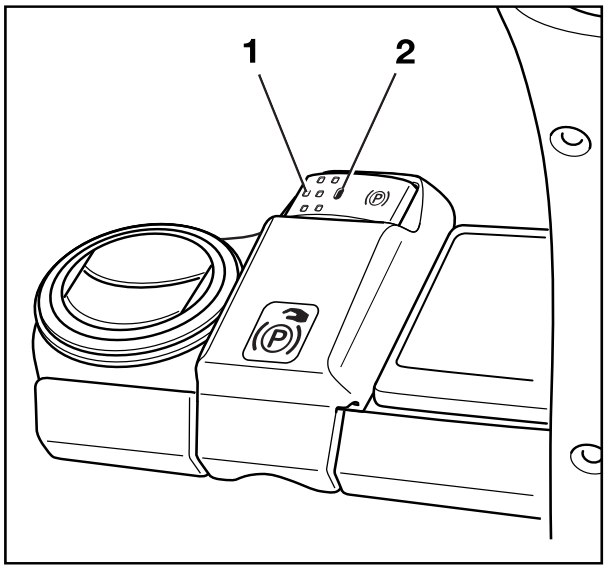

Symbols for the parking brake on the display-operating unit

Symbol	Description
(Ⓟ)	The parking brake has applied itself automatically. Pressing the accelerator pedal releases the parking brake automatically.
(Ⓟ)	The parking brake is applied by pressing the push button. The parking brake can be released only by pressing the push button.

Releasing the electric parking brake after the truck has been switched on

– Press the push button (1) to release the parking brake.

The truck is kept at a standstill by the traction motor.

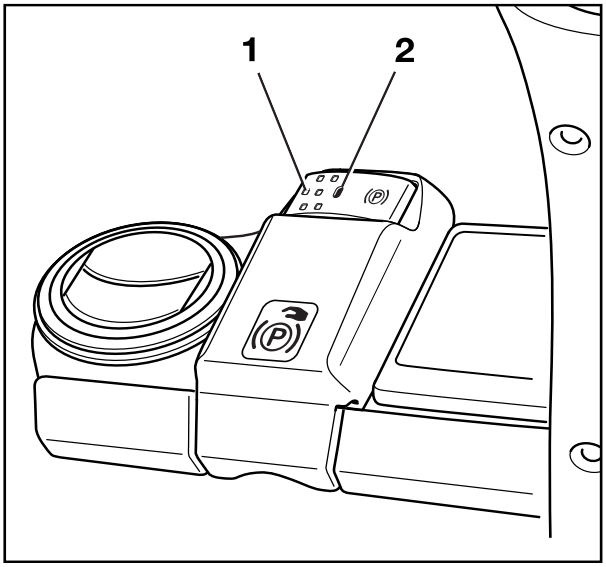

Manual actuation of the electric parking brake when the truck is stationary

Applying the parking brake manually

– Press the push button (1).

The electric parking brake is applied with an audible sound and the LED (2) lights up continuously. The (Ⓟ) symbol is shown on the display.

Releasing the parking brake manually

– Sit on the driver's seat.

– Press the push button (1).

The electric parking brake is released with an audible sound and the LED (2) goes out.

The indication of the driving speed replaces the (Ⓟ) symbol on the display.

Automatic actuation of the electric parking brake when the truck is stationary

When the truck is stationary, the electric parking brake is applied automatically in the following situations:

Automatically triggered actuation when the truck is stationary

Cause	Effect
The driver's seat is vacated.	The electric parking brake is applied with an audible sound. The LED (2) lights up with a steady light.
The accelerator pedal is released (brake pedal not pressed).	After a specified delay, the electric parking brake is applied with an audible sound. The LED (2) lights up with a steady light. The truck is held on a gradient by the traction motor until the electric parking brake is applied.
The truck is switched off.	The electric parking brake is immediately applied with an audible sound. The LED (2) will illuminate briefly with a steady light until the control units have switched off.
The emergency off switch is actuated.	The electric parking brake is immediately applied with an audible sound and the LED (1) illuminates with a steady light.

If the electric parking brake is applied automatically, the (P) symbol is shown on the display-operating unit. The LED (2) lights up.

– To release the electric parking brake, the driver must sit down on the driver's seat again.

– Press the accelerator pedal.

The electric parking brake is released with an audible sound. The LED (2) goes out.

NOTE

If the (P) symbol is shown on the display, the truck can be driven only once the electric parking brake has been released by pressing the push button (1). This can happen if the parking brake was not applied by releasing the accelerator pedal or vacating the driver's seat.

Actuation of the electric parking brake when the truck is in motion

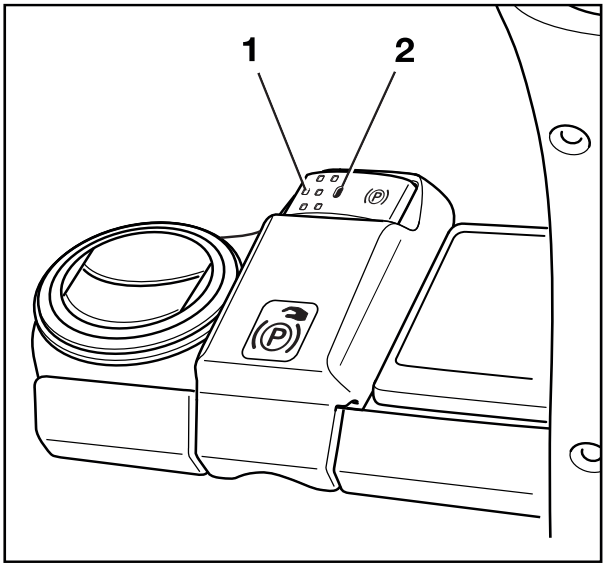

Manual actuation when the truck is in motion

– Press the push button (1).

The truck is braked by the drive unit according the selected drive programme. Once the truck has come to a standstill, the electric parking brake is applied with an audible sound. The LED (2) lights up with a steady light. The Ⓟ symbol is shown on the display-operating unit.

– If the braking efficiency is insufficient, apply the service brake in addition.

NOTE

If the drive unit fails, the truck can be braked by pressing the push button (1). Keeping the push button (1) pressed for an extended time or pressing it multiple times makes the truck brake harder. The electric parking brake cannot be released by pressing the accelerator pedal.

WARNING

Risk of accident!

The truck may decelerate abruptly.

– Fasten the seat belt.

Automatically triggered actuation when the truck is in motion

Cause	Effect
The driver's seat is vacated.	The truck is braked according the selected drive programme. Once the truck has come to a standstill, the electric parking brake is applied with an audible sound. The LED (2) lights up with a steady light. The Ⓟ symbol is shown on the display.
The key switch is switched off.	The truck will coast to a stop. Once the truck has come to a standstill, the electric parking brake is applied with an audible sound. The LED (2) lights up with a steady light. The Ⓟ symbol is shown on the display until the control units have switched off.

Cause	Effect
The emergency off switch is actuated.	The truck will coast to a stop. Once the truck has come to a standstill, the electric parking brake is applied with an audible sound. The LED (2) lights up with a steady light. The Ⓟ symbol is shown on the display.
The truck will accelerate sharply even though the driver's seat is not occupied.	The electric parking brake is immediately applied with an audible sound. The LED (2) lights up with a steady light. The Ⓟ symbol is shown on the display.
The truck accelerates sharply even though the accelerator pedal has not been pressed.	The parking brake is immediately applied with an audible sound. The LED (2) lights up with a steady light. The Ⓟ symbol is shown on the display.

Malfunctions in the electric parking brake

⚠ DANGER

There is a risk of fatal injury from being run over if the truck rolls away.

- Do not park the truck on a gradient.
- Do not leave the truck until the parking brake has been applied.
- In an emergency, secure the truck with wedges on the downhill-facing side to prevent it from rolling away.

- Before leaving the truck, make sure that the parking brake is properly applied.

Message:
Apply parking brake via button.

If the truck control unit detects a malfunction in the parking brake, the truck cannot be switched off.

- The message: Ⓘ `Apply parking brake via button` is shown on the display-operating unit.
- The LED (1) on the push button (2) flashes.
- A warning signal sounds.

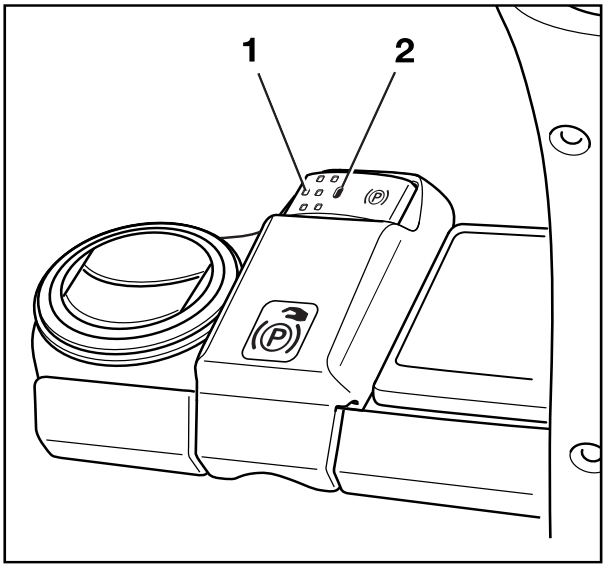

NOTE

If a truck with a faulty parking brake has to be switched off, always secure the truck against rolling away.

A possible cause of the malfunction is that the parking brake cannot determine whether the truck is stationary or still in motion. The following section describes how to actuate the parking brake when it is faulty:

Actuating a faulty parking brake when the truck is stationary

There are two ways to apply the parking brake:

– Press and hold the push button (1) for at least five seconds and then release the push button.

OR

– Press the push button (1) several times in succession until a total of five seconds is reached.

The parking brake is applied with an audible sound. After the push button is released, the parking brake should not make any further sounds; if a sound is heard, this means the push button was pressed for less than five seconds. In this case, press the push button again to apply the parking brake again. If necessary, repeat this process until the parking brake is applied and the Ⓟ symbol is displayed.

Actuating a faulty parking brake when the truck is in motion

– Press the push button (1).

The parking brake is applied.

NOTE

Keeping the push button (1) pressed for an extended time or pressing it multiple times makes the truck brake harder.

"Safe parking" function

This function monitors the braking effect after the truck is parked. If a sensor is fitted on the lift mast (variant), the function also checks whether the fork carriage is lowered.

This function alerts the driver with an audible warning signal if:

- The driver leaves the driver's seat but the parking brake could not be applied.
- The driver leaves the driver's seat without lowering the fork carriage (variant).
- The driver attempts to switch off the truck but the parking brake could not be applied.
- The truck starts moving within 20 seconds after the parking brake was applied.

Activating and intervening in the "Safe parking" function

Cause	Effect
The driver's seat is vacated. The electric parking brake cannot be applied or previously could not be applied.	The following message is shown on the display: `Parking brake cannot be applied.` - To acknowledge this, press the ☑ Softkey. If the driver's seat is vacated, a warning signal sounds. Sitting on the driver's seat silences the warning signal.
The truck needs to be switched off. The electric parking brake cannot be applied or previously could not be applied.	The truck cannot be switched off. A warning signal sounds. The following messages are shown on the display: `Parking brake cannot be applied.` ⓘ - To acknowledge this, press the ☑ Softkey. `Switch off truck anyway?` ? - To acknowledge this, press the ☑ Softkey. `Secure the truck to prevent it rolling away.` ⚠ - Secure the truck with wedges so that it cannot roll away. - To acknowledge this, press the ☑ Softkey. Only now can the truck be switched off.

⚠ DANGER

Risk of fatal injury from being run over if the truck rolls away!

If the parking brake is faulty, park the truck safely. Secure the truck to prevent it from rolling away.

– To do this, strictly adhere to the following instructions:

– If the parking brake cannot be applied automatically or via the push button, perform an emergency actuation of the parking brake. See the section entitled "Emergency actuation of the electric parking brake (variant)" in the chapter entitled "Behaviour in emergencies".

– If the parking brake cannot be applied via the emergency actuation process, secure the truck with wedges so that the truck cannot roll away.

– Have the parking brake repaired by the authorised service centre.

Message: Parking brake cannot be applied

If the truck control unit detects a malfunction in the parking brake, the truck cannot be switched off.

- The message `Parking brake cannot be applied` is shown on the display-operating unit. 🕮
- The LED (2) on the push button (1) flashes.
- A warning signal sounds.

NOTE

If it is necessary to switch off a truck with a faulty parking brake, the section entitled "Switching off the truck when the electric parking brake is faulty" must be observed. It is essential to secure the truck to prevent it from rolling away.

▷

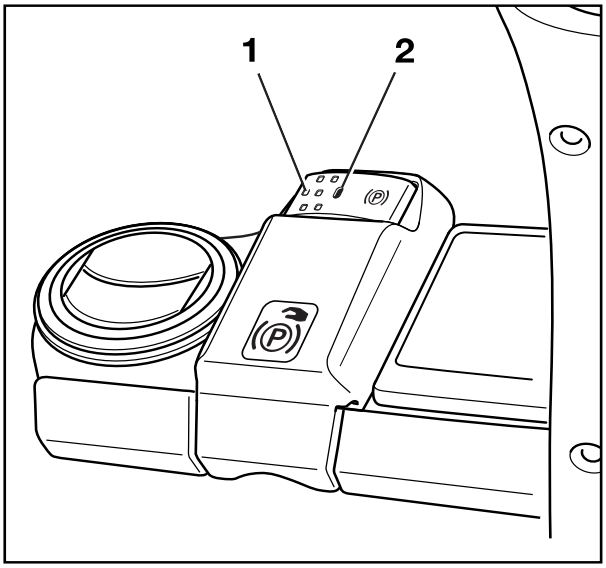

NOTE

If the parking brake is released via the emergency actuation process, it is possible to drive the truck at a low speed.

- *The truck can then be moved out of the hazardous situation or to the repair location.*
- *Driving with a faulty parking brake requires the driver to be especially vigilant.*

– If the parking brake cannot be applied automatically or via the push button, apply the parking brake via the emergency actuation process. See the section entitled "Emergency actuation of the parking brake (variant)" in the chapter entitled "Behaviour in emergencies".

– If the parking brake cannot be applied via the emergency actuation process, secure the truck with wedges so that the truck cannot roll away.

– Have the parking brake repaired by an authorised service centre.

Steering

DANGER

Risk of accident!

If the hydraulics fail, there is a risk of accident as the steering characteristics will have changed.

– Do not operate the truck if it has a defective steering system.

– Steer the truck by turning the steering wheel (1) accordingly.

Turning the steering wheel to the left (L) steers the truck to the left (L).

Turning the steering wheel to the right (R) steers the truck to the right (R).

The arrow (2) displays the direction in which the truck is moving.

For information on the turning radius, see the "Technical data".

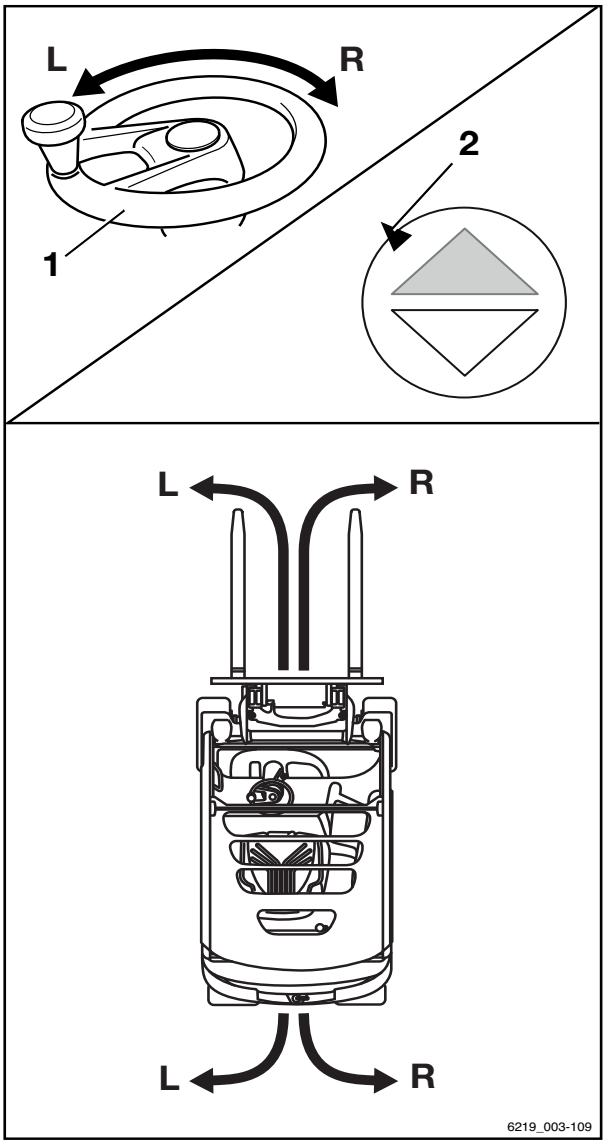

Reducing speed when turning (Curve Speed Control)

This function reduces the speed of the truck as the steering angle increases, regardless of the amount to which the accelerator has been actuated. If the steering angle is reduced again upon exiting the curve, the truck accelerates in line with how far the accelerator is depressed.

However, the function does not release the driver from the duty to approach a curve at a speed according to the following factors:

- The carried load
- The roadway conditions
- The radius of the curve

DANGER

The Curve Speed Control function cannot override the physical limits of stability. Despite this function, there still is a risk of tipping!

– Before using this function, familiarise yourself with the change to the driving and steering characteristics of the truck.

DANGER

Increased risk of tipping if the Curve Speed Control function is disabled! If the controller fails while the truck is in motion or if the controller is disabled, the truck will no longer automatically brake when steering.

– Do not turn off the key switch while driving.
– Actuate the emergency stop switch only in emergencies.
– Always adapt your driving style to the conditions.

Despite the Curve Speed Control function, the truck may overturn in extreme cases within the following situations:

- Cornering too fast on uneven or inclined roadways.
- Turning the steering wheel sharply while driving.
- Cornering with an inadequately secured load.
- Cornering too fast on a smooth or wet roadway.

▷

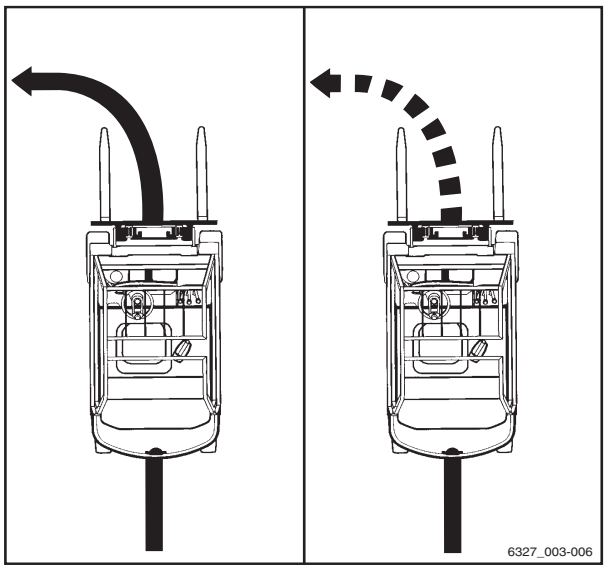

Speed reduction when the fork carriage is raised (variant)

If the truck is equipped with this variant, the speed of the truck is reduced automatically if the lift height of the fork carriage is above 500 mm.

Speed reduction when the cab door is open

⚠ WARNING

Risk of accident from sudden deceleration of the truck

If the cab door is opened while the truck is in motion, the truck brakes automatically.

– Keep the cab door closed when driving.

With the "cab" equipment variant, the truck has a cab door monitoring function via a sensor. The signal from this sensor is linked with the signal from the buckle switch in the control electronics of the truck.

If the cab door is not closed and the seat belt is not fastened, the driving speed is limited to 4 km/h. The message `Close the cab door or fasten belt` appears in the display.

If the cab door is opened while the truck is in motion, the truck brakes automatically to a speed of 4 km/h. The message `Close the cab door` appears in the display.

If the seat belt is released with the cab door closed, no message appears in the display.

Speed restriction (variant)

The speed restriction (variant) is a function that can be configured by the fleet manager. It sets a maximum speed that can either be permanent or be called up by the driver. This function helps the driver to comply with speed restrictions, e.g. in storage areas or specific areas.

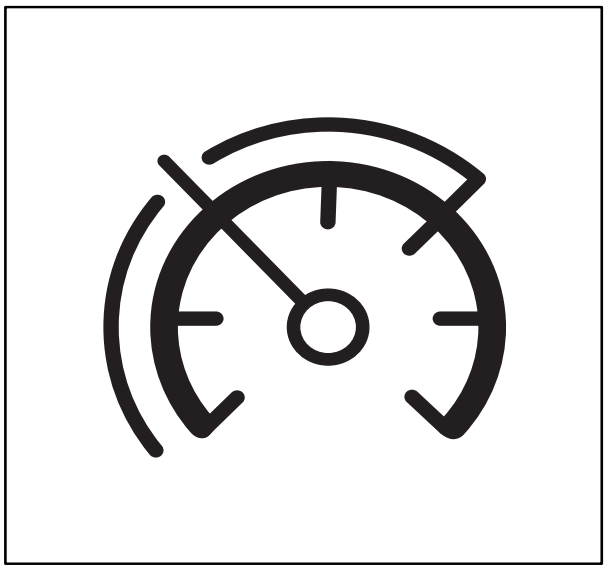

Switching the speed restriction on and off

– Press the button .

The first menu level appears.

– Press the "Drive" softkey .

The "Drive" menu appears.

– Press the "Speed restriction" softkey .

The activation bar appears next to the symbol. The speed restriction is switched on.

– To switch off the speed restriction, press the softkey again.

Configuring the speed restriction

NOTE

Access to the settings menu is only available if the truck is at a standstill and the parking brake is applied. If the parking brake is released prematurely, the settings menu will close. Access is only granted when the password is entered by the fleet manager.

– Stop the truck.

– Actuate the parking brake.

– Press the button .

– Press the "Settings" softkey .

The first menu level appears.

– Activate the "Access authorisation for the fleet manager".

The "Settings menu" opens on the display.

– Press the `Truck settings` softkey .

– Press the `Speed restriction` softkey.

The menu that opens offers the following functions:

- `Permanent`
  Enabling this function restricts the speed until the fleet manager disables this function.
- `By pressing a button`
  If this function is activated, the driver may switch the speed restriction on and off by pressing the softkey.
- `Entering the maximum speed`
  This menu can be used to set the maximum truck speed when speed restriction is active.

– To adjust the maximum speed, press the `Enter max. speed` softkey.

The `speed restriction` menu opens. ▷

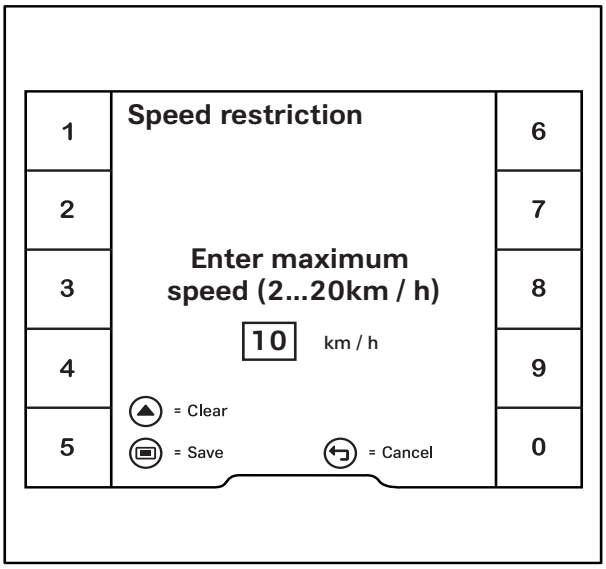

– Using the softkeys, set a maximum speed between 2 km/h and 20 km/h.

The maximum speed is dependent on the truck equipment and may be restricted by a factory setting.

– To `save`, press the button.

The maximum speed is entered.

– To `clear`, press the scroll button.

The entry is deleted.

– To `cancel`, press the back button.

The display returns to the previous menu.

The main display button takes you to the main display.

Parking

Parking the truck securely and switching it off

DANGER

There is a risk of fatal injury from being run over if the truck rolls away.

- Do not park the truck on gradients.
- In emergencies, secure the truck using wedges on the side facing downhill.
- Only leave the truck when the parking brake has been applied.

DANGER

There is a risk to life caused by a falling load or if truck components are being lowered.

- Lower the load fully before leaving the truck.

CAUTION

Batteries may freeze!

If the truck is parked in an ambient temperature of below -10°C for an extended period, the batteries will cool down. For lead-acid batteries, the electrolyte can freeze and damage the batteries. The truck is then not ready for operation.

- At ambient temperatures of below -10°C, only park the truck for short periods of time.

- Apply parking brake.
- Lower the fork carriage to the ground. ▷
- Tilt the lift mast forwards until the tips of the fork arms rest on the ground.
- If attachments (variant) are fitted, retract the working cylinders; see the chapter entitled "General instructions for controlling attachments".

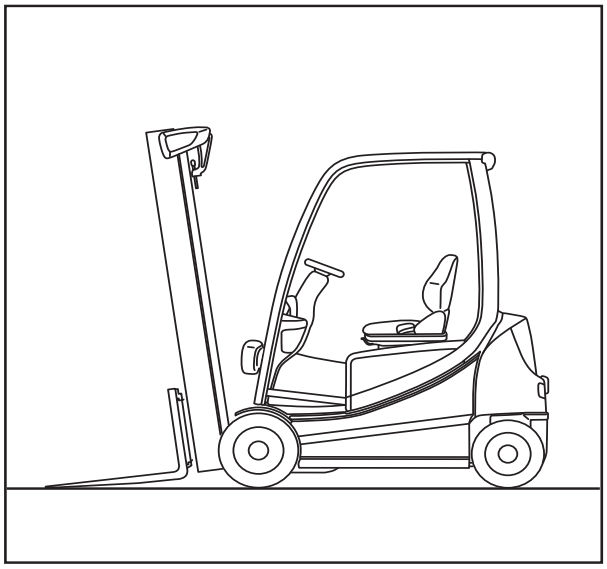

– Turn the switch key to position "0" and remove the key. ▷

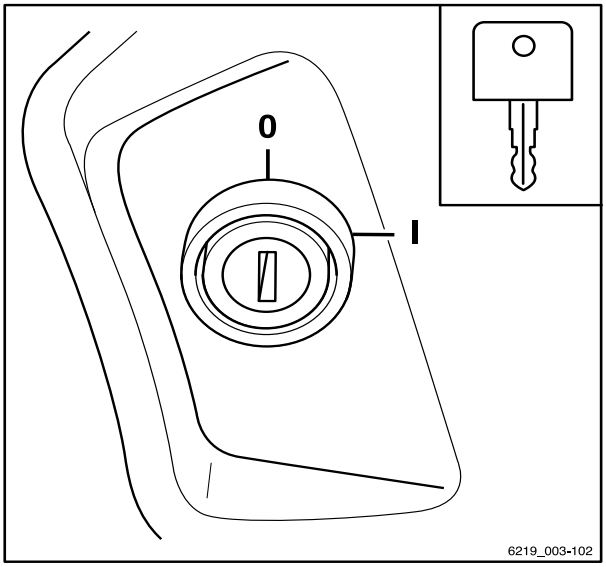

– In the "push button ignition" variant, press the button. (1) ▷

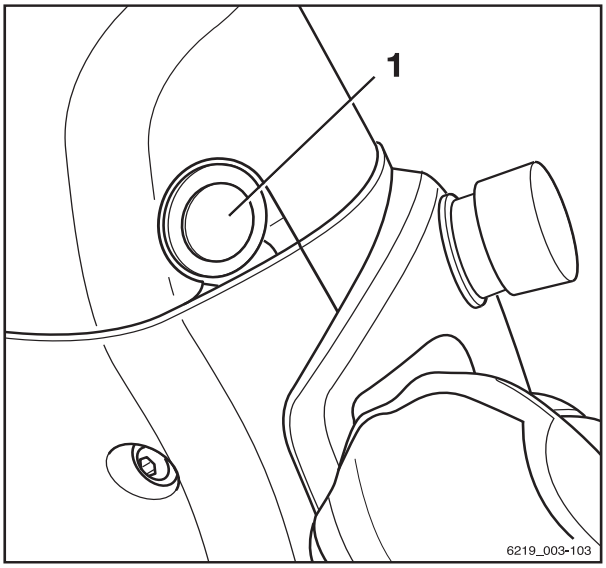

NOTE

Switch keys, FleetManager cards (variant), FleetManager transponder chips (variant) and the PIN code for access authorisation (variant) must not be handed over to other persons unless explicit instructions to this effect have been given by the responsible fleet manager.

Wheel chock (variant)

The wheel chock (variant) is used to prevent the truck from rolling away on a slope. It is located on the right-hand mudguard.

- Pull the latch forward (1) and hold it in place.
- Grip the wheel chock by its handle (3). Remove the wheel chock from the support mounting via the guide (2).
- Push the wheel chock under a front axle wheel on the side facing the descending gradient.
- After use, reinsert the wheel chock in the support mounting.
- Make sure that it is correctly seated in the guide (2) and that the latch (1) is holding the wheel chock in place.

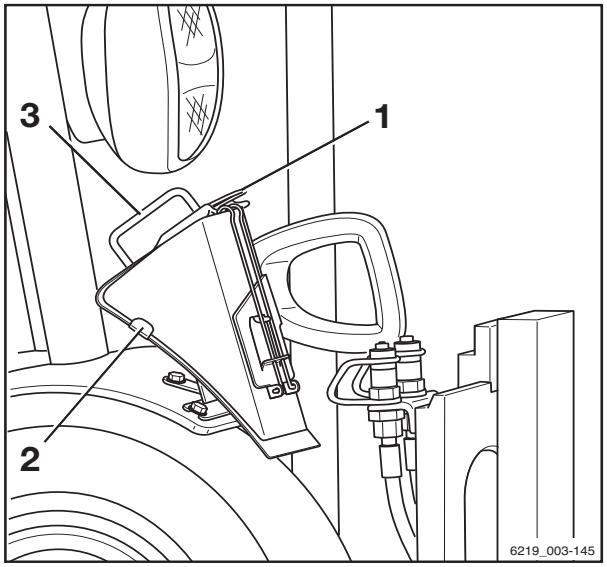

Lifting

Lifting system variants

The movement of the fork carriage and the lift mast heavily depends on the following equipment:

- The lift mast with which the truck is equipped, see ⇒ Chapter "Lift mast versions", P. 4-149
- The operating device with which the hydraulic functions are controlled, see ⇒ Chapter "Operating devices for the lifting system", P. 4-151

Regardless of the equipment variants of the truck, the basic specifications and procedures must be complied with, see ⇒ Chapter "Safety regulations when handing loads", P. 4-174.

Lift mast versions

⚠ DANGER

Risk of accident if the lift mast or the load collides with low ceilings or entrances.

– Note that the inner lift mast or load may be higher than the fork carriage.
– Observe the heights of ceilings and entrances.

One of the following lift masts may be attached to the truck:

Telescopic lift mast

When lifting, the lift mast rises above the outer lift cylinders. The lift mast takes the fork carriage with it via the chains. In this scenario, the fork carriage rises at twice the speed of the inner lift mast. The top edge (1) of the inner lift mast can therefore be higher than the fork carriage.

▷

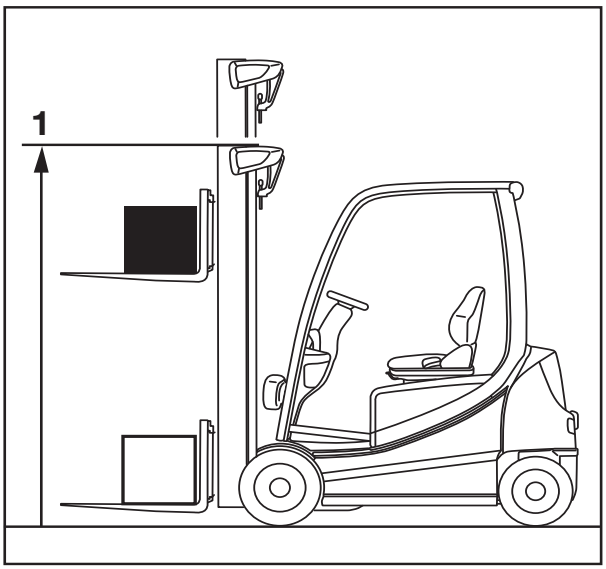

NiHo lift mast (variant)

During lifting, the inner lift cylinder moves up to free lift (3) and then the outer lift cylinders raise the inner lift mast up to the maximum height (2).

NOTE

When lifting above the free lift, the fork carriage always remains at the upper edge of the extending lift mast.

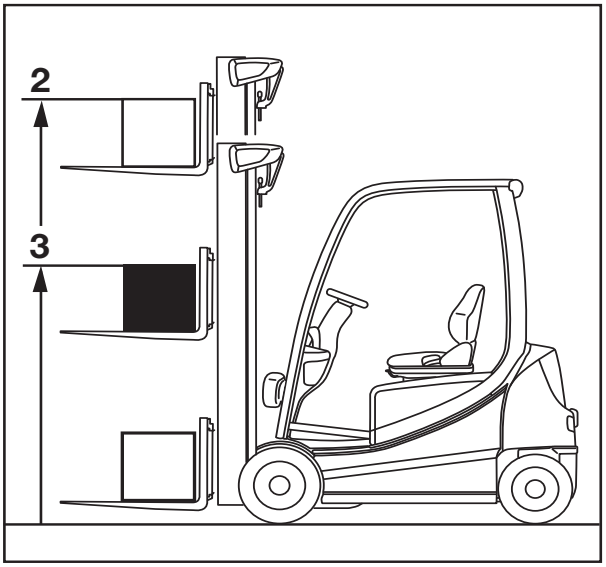

Triple mast (variant)

During lifting, the inner lift cylinder moves up to free lift (3) and then the outer lift cylinders raise the inner lift mast up to the maximum height (2).

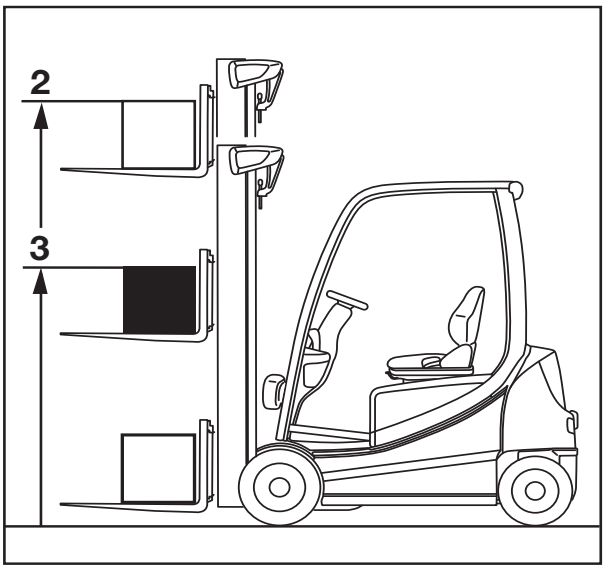

Mono lift mast "Easy-View"

When lifting, the inner lift mast rises above the outer lift cylinders. The lift mast takes the fork carriage with it via a chain. In this scenario, the fork carriage rises at twice the speed of the inner lift mast.

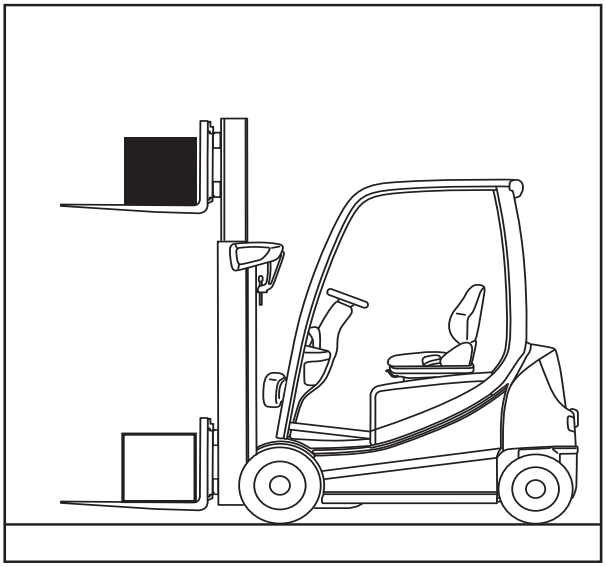

This lift mast has a low, narrow design to make it easier to handle pallets. The driver has an unobstructed view past the lift mast to the left and right, and can also see over the lift mast.

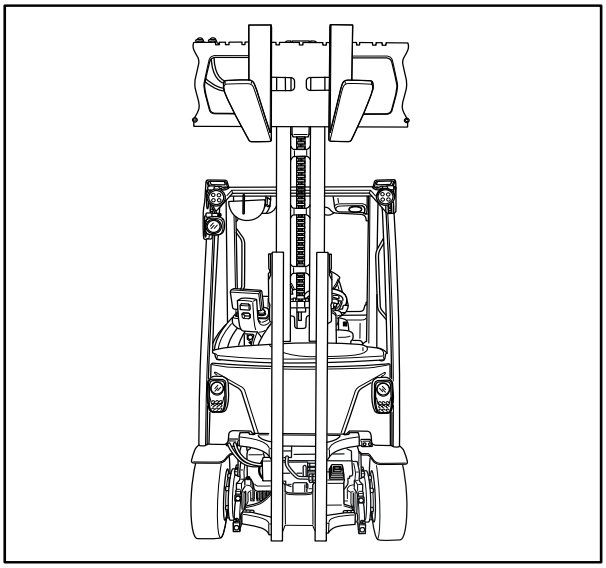

Data

Height: lift mast retracted (h_1)	1650 mm
Height: lift (h_3)	2137 mm
Rated capacity: load (Q)	2000 kg

Operating devices for the lifting system

The method of operating the lifting system depends on the operating devices included in the truck's equipment.

Possible equipment variants include:

- Multi-lever
- Double mini-lever
- Triple mini-lever
- Quadruple mini-lever

- Fingertip
- Joystick 4Plus

For clarity, the movements of the lifting system are referred to by the letters (A, B, C, D) in this subchapter. ▷

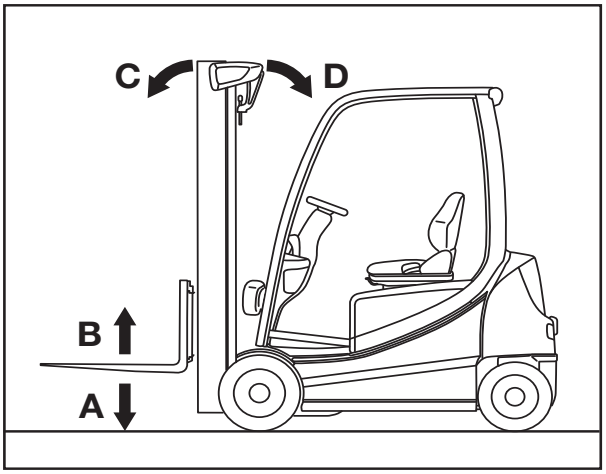

A Lowering the fork carriage

B Lifting the fork carriage

C Tilting the lift mast forwards

D Tilting the lift mast backwards

– See the relevant sections in this subchapter.

⚠ WARNING

Risk of accident due to the slow response of the lifting system!

If a low dynamic is set, the lifting system responds after a delay when the operating device is released, even in an emergency. The fork carriage does not stop immediately but after approx. one second.

This behaviour may also occur when specific settings are configured for the "Dynamic Load Control" assistance functions.

– Work with particular attention and care.

Controlling the lifting system using multi-lever operation

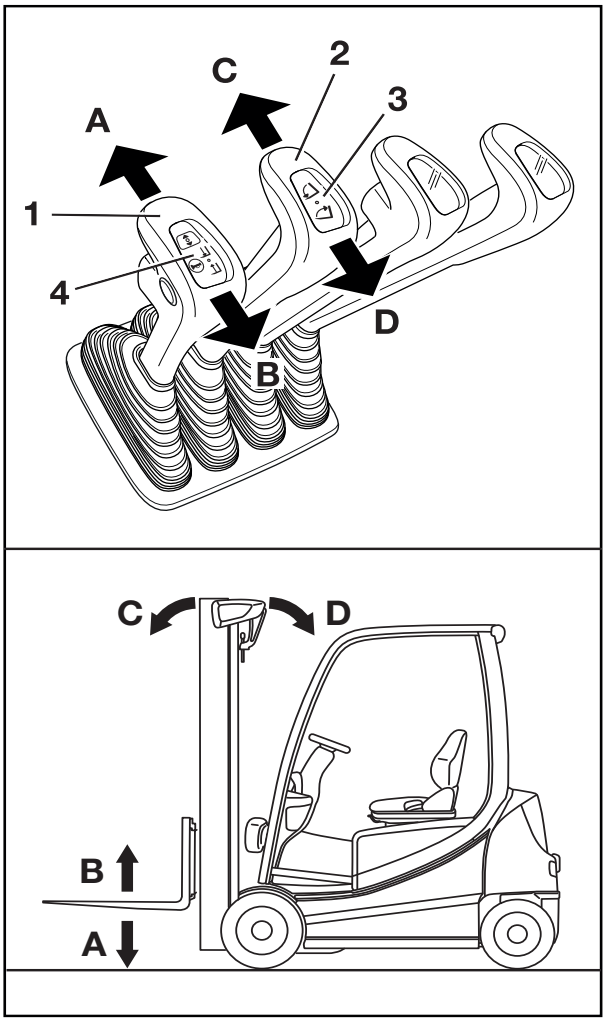

DANGER

Reaching into or climbing between moving parts of the truck (e.g. lift mast, sideshifts, working equipment, load carrying devices etc.) can lead to serious injury or death and is therefore prohibited.

- Observe the safety regulations for handling loads.
- Operate the lifting system from the driver's seat only.

The lifting, lowering and tilting functions of the lift mast are controlled using the "lifting/lowering" operating lever (1) and the "tilting" operating lever (2). The adhesive labels bearing the pictograms for the hydraulic functions (3, 4) are affixed on the operating levers.

- Observe the pictograms on the adhesive labels (3) and (4).

The pictograms are arranged according to the direction of movement of the operating lever (1) or (2).

Lifting/lowering the fork carriage

To lift the fork carriage:

- Move the "lifting/lowering" operating lever (1) in the direction of the arrow (B).

To lower the fork carriage:

- Move the "lifting/lowering" operating lever (1) in the direction of the arrow (A).

Tilting the lift mast

To tilt the lift mast forwards:

- Move the "tilting" operating lever (2) in the direction of the arrow (C).

To tilt the lift mast backwards:

- Move the "tilting" operating lever (2) in the direction of the arrow (D).

Movements of the lifting system and meanings of the pictograms

A Lowering
B Lifting
C Tilting forwards
D Tilting backwards

Controlling the lifting system using a double mini-lever ▷

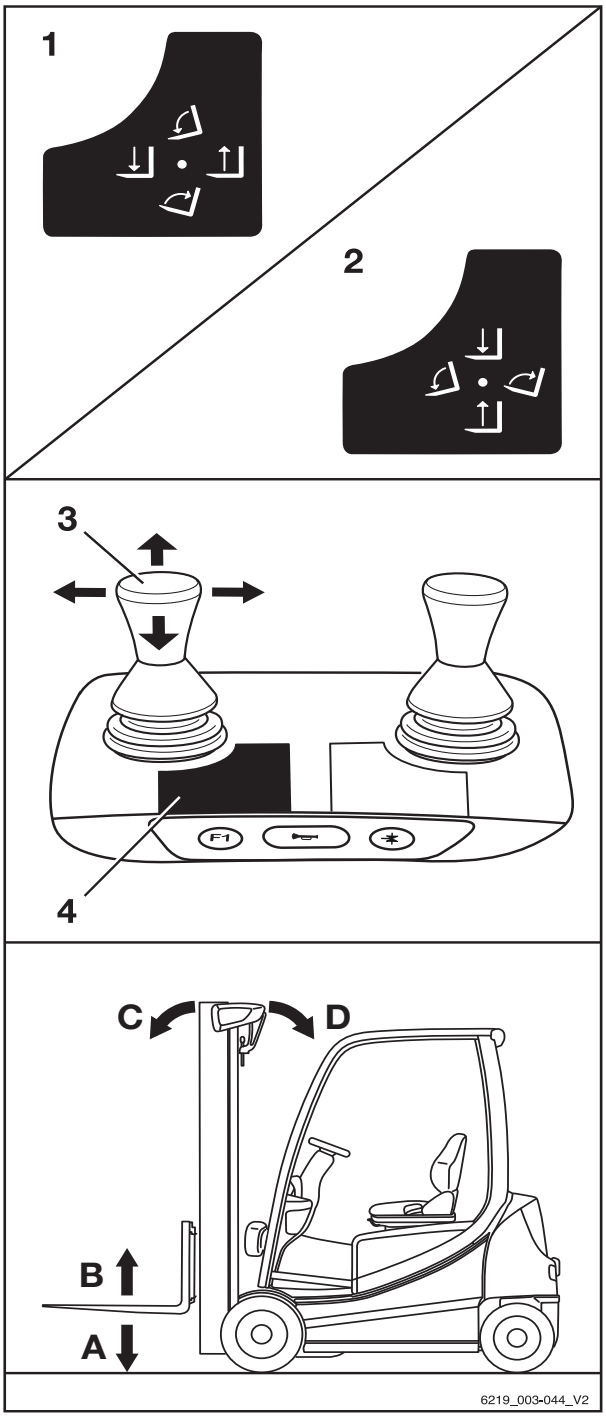

DANGER

Reaching into or climbing between moving parts of the truck (e.g. lift mast, sideshifts, working equipment, load carrying devices etc.) can lead to serious injury or death and is therefore prohibited.

- Observe the safety regulations for handling loads.
- Operate the lifting system from the driver's seat only.

The lifting, lowering and tilting movements of the lift mast are controlled using the "Lift mast" 360° lever (3). The adhesive label bearing the pictograms for the hydraulic functions (1) or (2) is affixed at the designated point (4).

- If the adhesive label becomes illegible or is not present, please contact your authorised service centre.
- Observe the pictograms on the adhesive labels (1) and (2).

The pictograms are arranged according to the direction of movement of the "lift mast" 360° lever (3).

NOTE

The truck is configured at the factory in accordance with the adhesive label (1). The following steps for moving the fork carriage and lift mast are based on this configuration.

Lifting/lowering the fork carriage

To lift the fork carriage:

- Move the "lift mast" 360° lever (3) in the direction of arrow (B).

To lower the fork carriage:

- Move the "lift mast" 360° lever (3) in the direction of arrow (A).

Tilting the lift mast

To tilt the lift mast forwards:

– Move the "lift mast" 360° lever (4) in the direction of arrow (C).

To tilt the lift mast backwards:

– Move the "lift mast" 360° lever (4) in the direction of arrow (D).

Movements of the lifting system and meanings of the pictograms

A Lowering
B Lifting
C Tilting forwards
D Tilting backwards

Controlling the lifting system using a triple mini-lever ▷

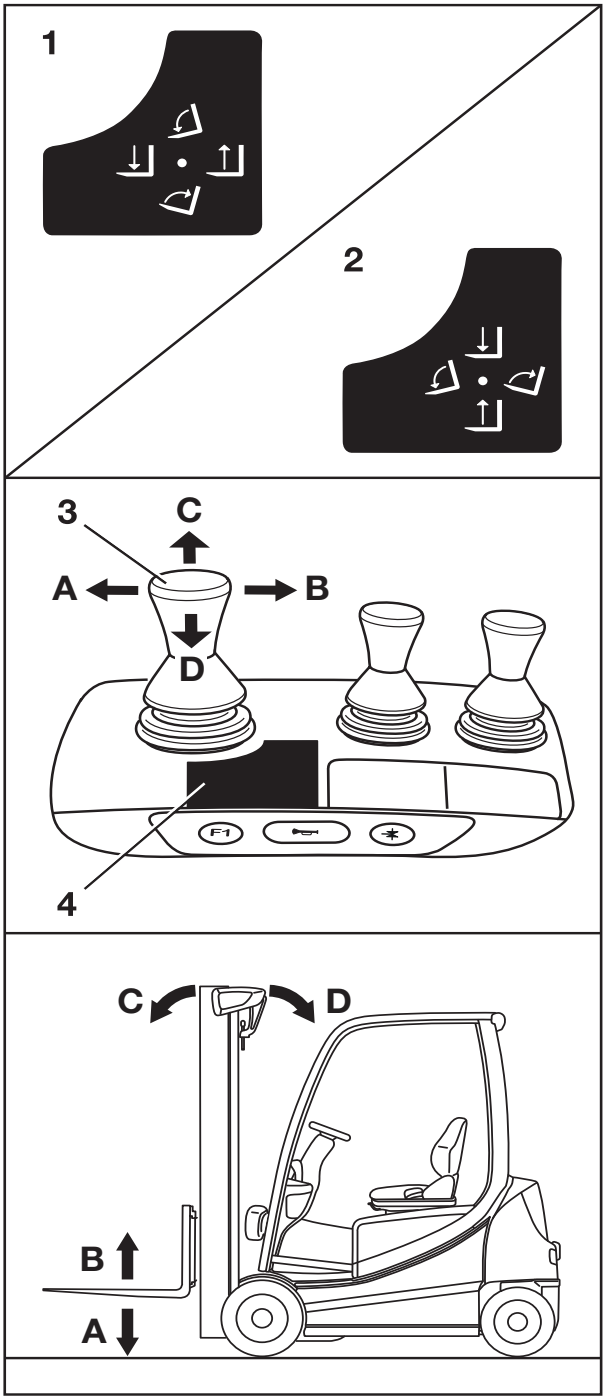

⚠ DANGER

Reaching into or climbing between moving parts of the truck (e.g. lift mast, sideshifts, working equipment, load carrying devices etc.) can lead to serious injury or death and is therefore prohibited.

- Observe the safety regulations for handling loads.
- Operate the lifting system from the driver's seat only.

The lifting, lowering and tilting movements of the lift mast are controlled using the "lift mast" 360° lever (3). The adhesive label bearing the pictograms for the hydraulic functions (1) or (2) is affixed at the designated point (4).

- If the adhesive label becomes illegible or is missing, please contact your authorised service centre.
- Observe the pictograms on the adhesive labels (1) and (2).

The pictograms are arranged according to the direction of movement of the "lift mast" 360° lever (3).

NOTE

The truck is configured at the factory in accordance with the adhesive label (1). The following steps for moving the fork carriage and lift mast are based on this configuration.

Lifting/lowering the fork carriage

To lift the fork carriage:

- Move the "lift mast" 360° lever (3) in the direction of the arrow (B).

To lower the fork carriage:

- Move the "lift mast" 360° lever (3) in the direction of the arrow (A).

Tilting the lift mast

To tilt the lift mast forwards:

– Move the "lift mast" 360° lever (4) in the direction of the arrow (C).

To tilt the lift mast backwards:

– Move the "lift mast" 360° lever (4) in the direction of the arrow (D).

Movements of the lifting system and meanings of the pictograms

A Lowering
B Lifting
C Tilting forwards
D Tilting backwards

Controlling the lifting system using a quadruple mini-lever ▷

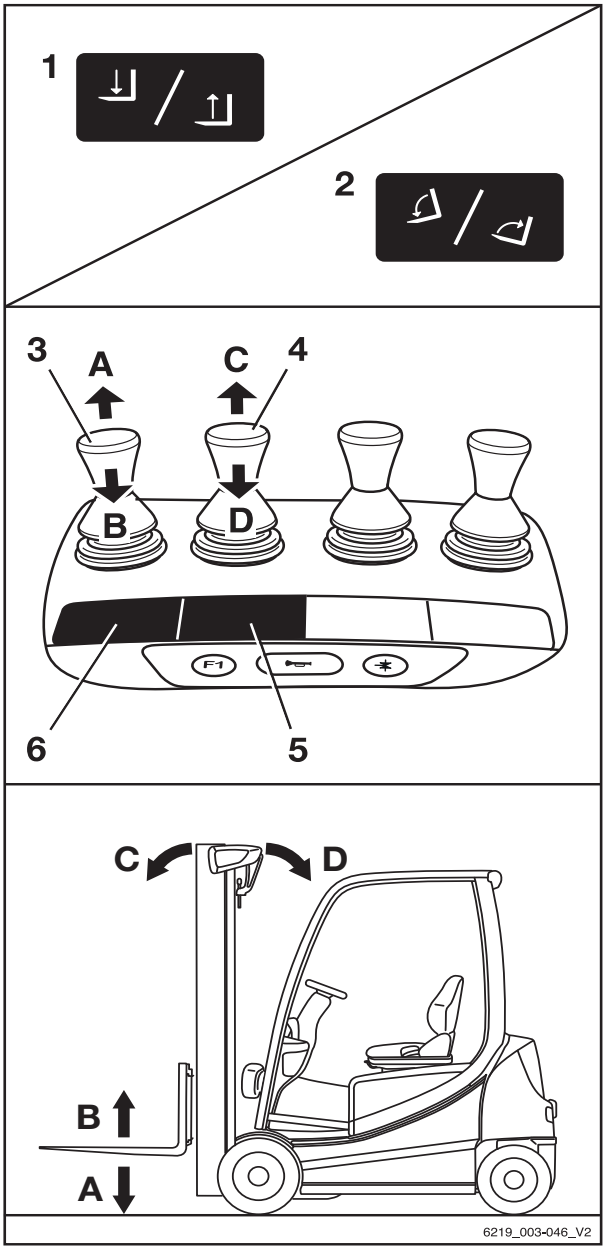

⚠ DANGER

Reaching into or climbing between moving parts of the truck (e.g. lift mast, sideshifts, working equipment, load carrying devices etc.) can lead to serious injury or death and is therefore prohibited.

- Observe the safety regulations for handling loads.
- Operate the lifting system from the driver's seat only.

The lifting, lowering and tilting functions of the lift mast are controlled using the "lifting/lowering" operating lever (3) and the "lift mast" operating lever (4). The adhesive label bearing the pictograms for the hydraulic functions (1) is affixed at the designated point (6). The adhesive label (2) is attached at the designated point (5). The truck is configured at the factory in accordance with the adhesive label (1).

- Observe the pictograms on the adhesive labels (1) and (2).

The pictograms are arranged according to the direction of movement of the operating lever (3) or (4).

Lifting/lowering the fork carriage

To lift the fork carriage:

- Move the "lifting/lowering" operating lever (3) in the direction of the arrow (D).

To lower the fork carriage:

- Move the "lifting/lowering" operating lever (3) in the direction of the arrow (C).

Tilting the lift mast

To tilt the lift mast forwards:

- Move the "lift mast" operating lever (4) in the direction of the arrow (A).

To tilt the lift mast backwards:

- Move the "lift mast" operating lever (4) in the direction of the arrow (B).

Movements of the lifting system and meanings of the pictograms

A Lowering
B Lifting
C Tilting forwards
D Tilting backwards

Controlling the lifting system using the Fingertip

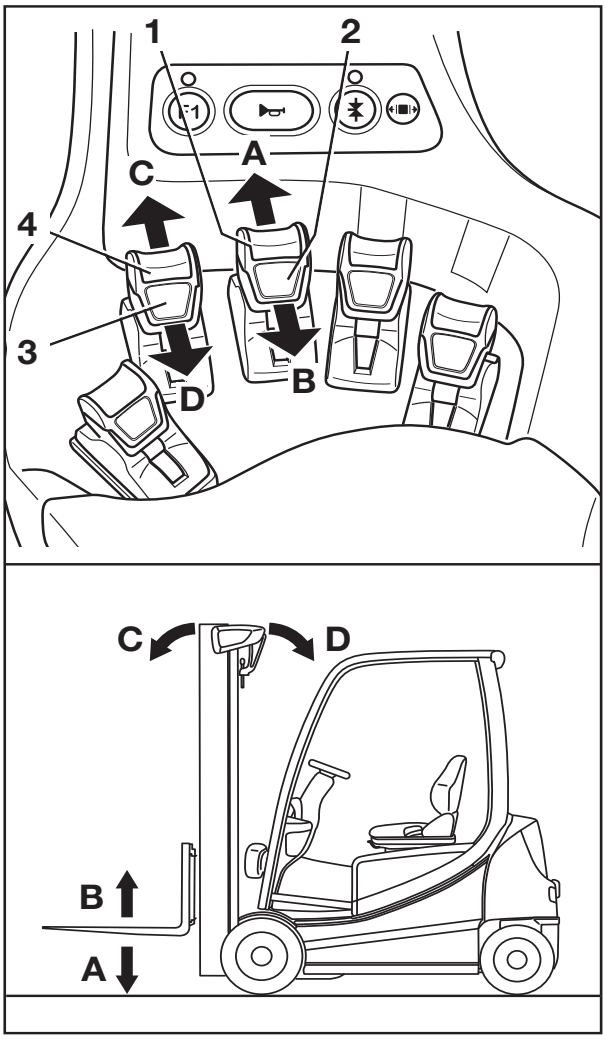

DANGER

Reaching into or climbing between moving parts of the truck (e.g. lift mast, sideshifts, working equipment, load carrying devices etc.) can lead to serious injury or death and is therefore prohibited.

- Observe the safety regulations for handling loads.
- Operate the lifting system from the driver's seat only.

The lifting, lowering and tilting functions of the lift mast are controlled using the "lifting/lowering" operating lever (1) and the "tilting" operating lever (4). The adhesive labels bearing the pictograms for the hydraulic functions (2, 3) are affixed on the operating levers.

- Observe the pictograms on the adhesive labels (2) and (3).

The pictograms are arranged according to the direction of movement of the operating lever (1) or (2).

Lifting/lowering the fork carriage

To lift the fork carriage:

- Move the "lifting/lowering" operating lever (1) in the direction of the arrow (A).

To lower the fork carriage:

- Move the "lifting/lowering" operating lever (1) in the direction of the arrow (B).

Tilting the lift mast

To tilt the lift mast forwards:

- Move the "tilting" operating lever (2) in the direction of the arrow (C).

To tilt the lift mast backwards:

- Move the "tilting" operating lever (2) in the direction of the arrow (D).

Movements of the lifting system and meanings of the pictograms

A Lowering
B Lifting
C Tilting forwards
D Tilting backwards

Controlling the lifting system using the Joystick 4Plus

DANGER

Reaching into or climbing between moving parts of the truck (e.g. lift mast, sideshifts, working equipment, load carrying devices etc.) can lead to serious injury or death and is therefore prohibited.

- Observe the safety regulations for handling loads.
- Operate the lifting system from the driver's seat only.

Lifting/lowering the fork carriage

To lift the fork carriage:

- Pull the Joystick 4Plus (1) backwards (B).

To lower the fork carriage:

- Push the Joystick 4Plus (1) forwards (A).

▷

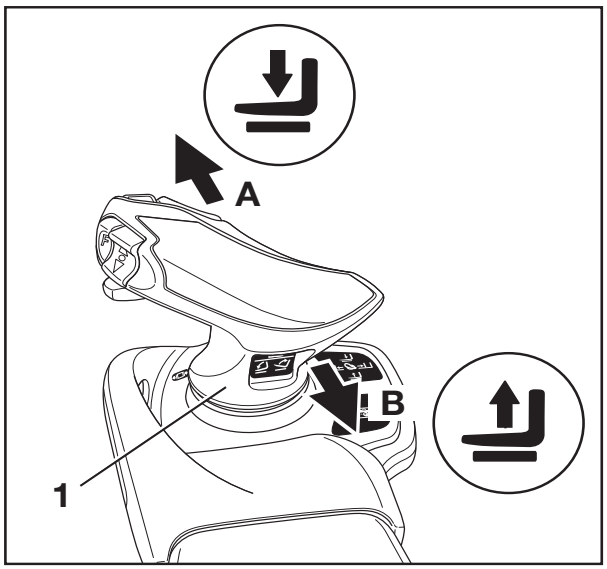

Tilt the lift mast

To tilt the lift mast forwards:

– Tilt the horizontal rocker button (2) to the left (C).

To tilt the lift mast backwards:

– Tilt the horizontal rocker button (2) to the right (D).

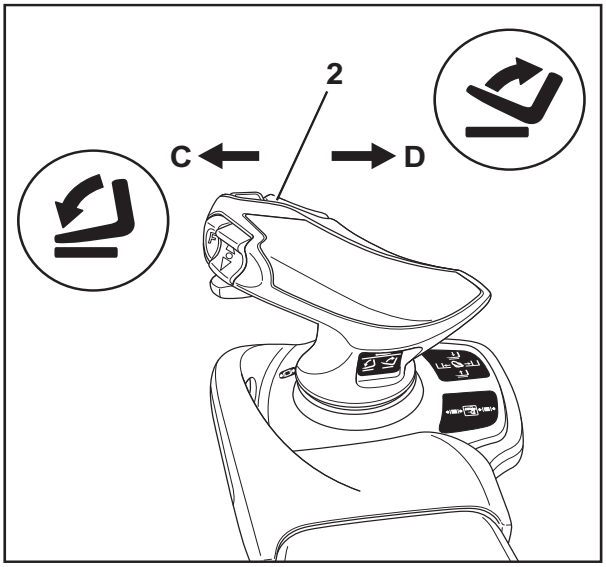

Fork-carriage sideshift

To move the fork carriage to the left.

– Push the Joystick 4Plus (1) to the left (E).

To move the fork carriage to the right:

– Push the Joystick 4Plus (1) to the right (F).

NOTE

The pictograms on the Joystick 4Plus indicate the direction of movement of the lift mast and the fork carriage.

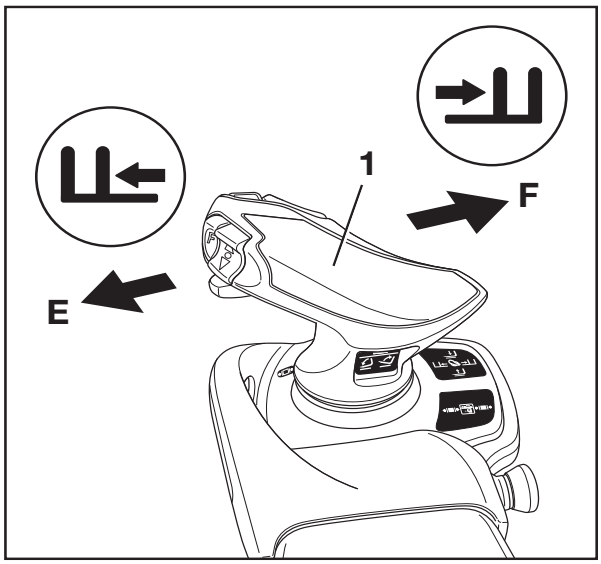

Dynamics of the hydraulic movements

⚠ WARNING

Risk of injury due to delayed response from the truck!

If a low dynamic is set, the lifting system responds after a delay when the operating device is released, even in an emergency. The fork carriage does not stop immediately upon release. It only stops after approximately one second. This behaviour may also occur when specific settings are configured for the "Dynamic Load Control" assistance system.

– Work with particular attention and care.

The authorised service centre can reduce the dynamics of the hydraulic movements to adapt the hydraulic movements to the application requirements. The hydraulic system movement will then respond more slowly to the actuation of the operating device.

High dynamics are suitable for applications that require the load lift system to respond quickly and directly. Low dynamics are suitable for applications in which impacts must be avoided, e.g. when moving fragile goods.

Maximum dynamics (standard setting)

- The hydraulic movement immediately follows the actuation of the operating device.
- When the operating device is released, the hydraulic movement decelerates very quickly.

  The load lift system comes to a standstill.

Minimum dynamics

- The hydraulic movement accelerates very slowly.
- The hydraulic movement follows the actuation of the operating device very slowly.
- When the operating device is released, the hydraulic movement only decelerates slowly.

  The load lift system therefore continues to run for some time before the movement comes to a standstill.

Selecting load programs 1 to 3

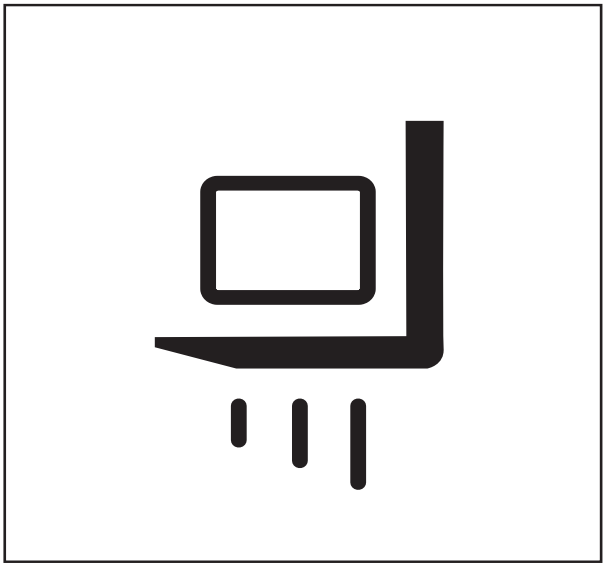

The truck has three load programs for the different lifting behaviours of the fork carriage and the lift mast. The higher the number of the load program selected, the greater the load dynamics.

Differences between the load programs

- 1 Load program 1:
  66% lifting speed
- 2 Load program 2:
  85% lifting speed
- 3 Load program 3:
  100% lifting speed

The lifting behaviour of the truck is selected via the display-operating unit under the "Load" menu item.

– Press the 1 ... softkey to select the desired load program. 3 drücken.

– If the load programs are saved as a favourite on a softkey, press the "Load dynamics" softkey until the number of the desired load program is shown on the display.

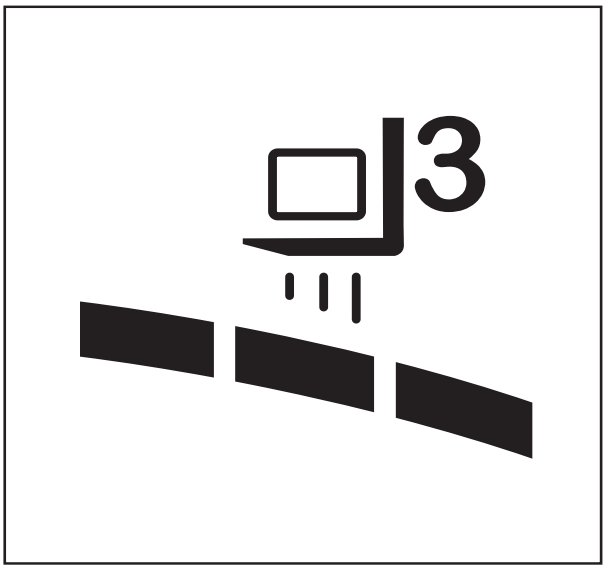

The number of dynamic bar segments shows the load dynamics of the selected load program.

Changing the fork arms

DANGER

There is a risk of fatal injury from being run over if the truck rolls away.

- Do not park the truck on gradients.
- Apply the parking brake.
- Change the fork extension in a cordoned-off, safe location on a level surface.

WARNING

There is a risk of injury when changing the fork arms; the weight of the fork arms could cause them to fall on your legs, feet or knees. The space to the left and right of the fork is a danger area.

- Always wear protective gloves and safety shoes when changing the fork arms.
- Ensure that no one stands in the danger area!
- Do not pull on the fork arms.
- The fork arms must always be carried by two people; if necessary, use a hoist.

NOTE

- *It is recommended that a transport pallet is used to supporting the fork arms when they are being installed or removed. The pallet size depends on the size of the fork arms used and must be of sufficient size so that the fork arms do not protrude after being placed on the pallet. This means the fork arms can be safely placed down and transported.*
- *Both fork arms can be pushed over onto one side.*

Removing

- Select the pallet according to the size of the fork arms.
- Position the pallet to the left or right of the fork carriage.
- Raise the fork carriage until the lower edges of the fork arms are approx. 3 cm higher than the height of the pallet.
- Actuate the parking brake and make sure it is applied securely.
- Turn the switch key to the left and remove it.
- Undo the locking screw (2) on the right or left.
- Pull the locking lever (1) upwards and push the fork arms outwards onto the pallet.

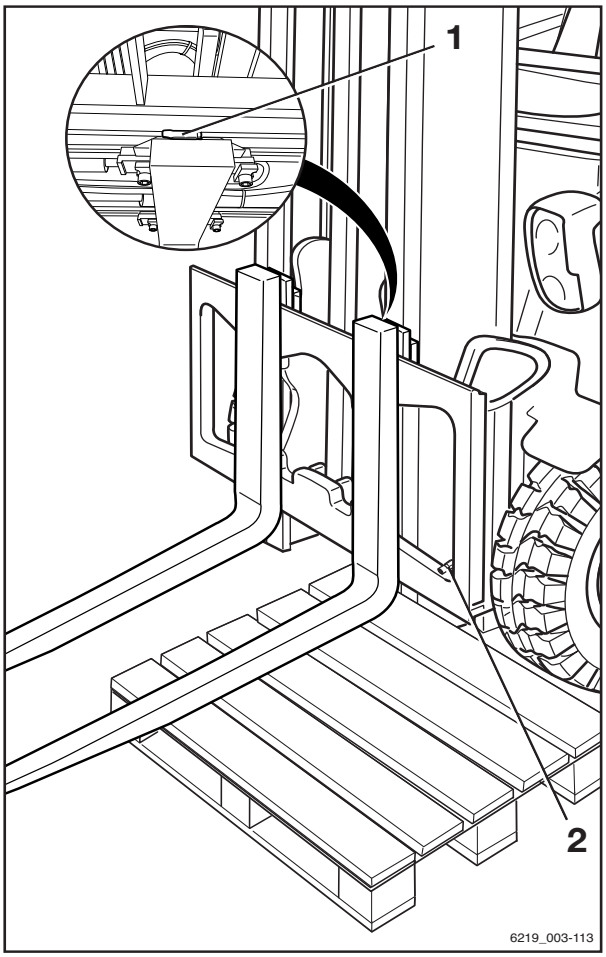

Installing

- Position the fork arms on a pallet to the left or right of the fork carriage.
- Push the fork arms onto the fork carriage from the outside towards the centre.
- Pull the locking lever (1) upwards and push the fork arms into the required position. Ensure that the locking lever snaps into place.
- Fit and tighten the locking screw (2).

⚠ DANGER

There is a risk of fatal injury from a falling load or fork!

- Tighten the locking screw (2) each time a fork is changed.
- It is not permitted to drive or to transport loads without the locking screw in place.

NOTE

If the truck is equipped with the "load measurement" comfort feature (variant), a "zero adjustment of the load measurement" must always be performed after the fork arms have been changed. Otherwise, correct load measurement cannot be guaranteed.

Fork extension (variant)

DANGER

There is a risk of fatal injury from being run over if the truck rolls away.

- Do not park the truck on gradients.
- Apply the parking brake.
- Change the fork extension in a cordoned-off, safe location on a level surface.

WARNING

There is a risk of crushing!

The weight of the fork extension can cause crushing and cuts can be caused by sharp edges or burrs.

- Always wear protective gloves and safety shoes.

WARNING

There is a risk of tipping!

The weight and dimensions of the fork extension affect the stability of the truck. The permissible weights stated on the capacity rating plate must be reduced in proportion to the actual load distance.

If the truck is equipped with a fork extension ex works, then the capacity rating plate will already have been adjusted accordingly.

- Observe the load capacity; refer to the chapter entitled "Before picking up a load".

NOTE

If the truck is equipped with the "load measurement" comfort feature (variant), a "zero adjustment of the load measurement" must always be performed after the fork arms have been changed. Otherwise, correct load measurement cannot be guaranteed.

Fitting

DANGER

Risk of fatal injury from falling load!

At least 60% of the length of the fork extension must lie on the fork arm. No more than 40% of the length of the fork extension may overhang the end of the fork arms. In addition, the fork extension must be secured against slipping from the fork arm.

If the fork extension (1) is not secured with a securing bolt (2) and linch pin (3), the load may fall, along with the fork extension.

- Push the fork extension all the way to the back of the fork.
- Make sure that 60% of the length of the fork extension is on the fork arm.
- Always secure the fork extension with the securing bolt.
- Always secure the securing bolt with the linch pin.

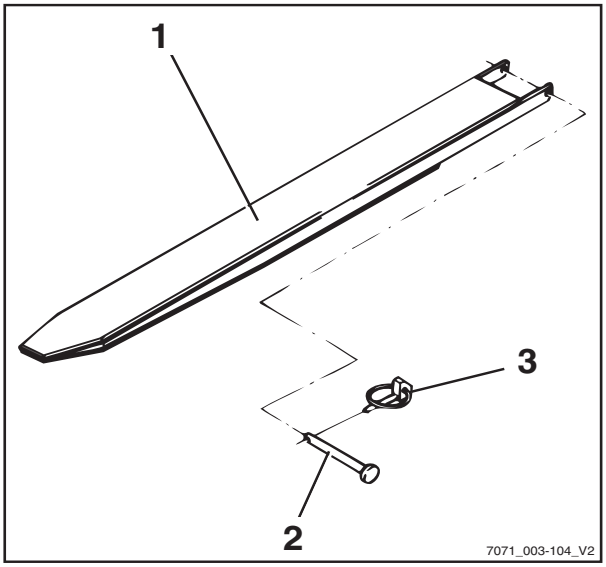

- Remove the linch pin (3) from the securing bolt (2).
- Remove the securing bolt from the fork extension (1).
- Push the fork extension onto the fork arms until the fork extension is flush with the fork back.
- Insert the securing bolt located behind the fork back fully into the fork extension.
- Insert the linch pin into the securing bolt and secure.

Removing

- Remove the linch pin (3) from the securing bolt (2).
- Remove the securing bolt from the fork extension (1).
- Pull the fork extension off the fork arms.
- Insert the securing bolt fully into the fork extension.
- Insert the linch pin into the securing bolt and secure.

Operation with reversible fork arms (variant)

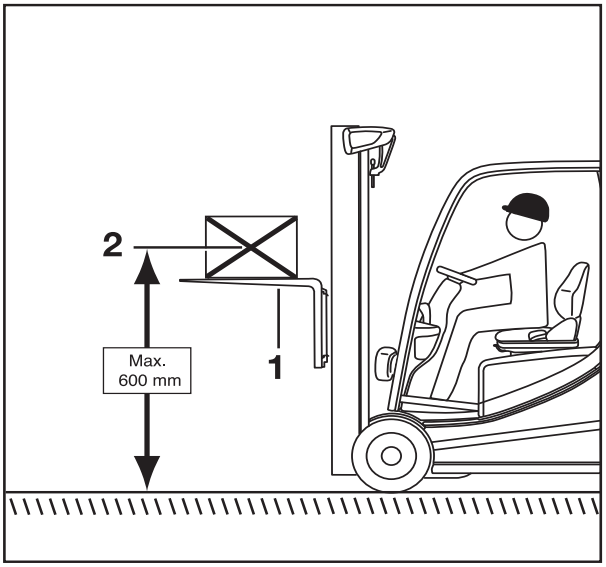

DANGER

Risk of fatal injury from falling load!

Normal fork arms are not structurally designed for reverse operation. If this instruction is not observed, it can lead to material failure and the load falling.

– Only work in reverse operation using reversible fork arms (1).

WARNING

Risk of accident from slipping load!

Loads may slip on the reversible fork arms if there is no load support. A fork extension (variant) cannot be secured against slipping.

– **Do not use** a fork extension (variant).

WARNING

Risk of accident from the truck tipping over.

When driving, the centre of gravity of the load (2) must not be more than 600 mm above the ground. The truck may tip forwards when driving or braking.

– Only drive with a load centre of gravity up to a max. of 600 mm above the ground

NOTE

If the truck is equipped with the "load measurement" comfort feature (variant), a "zero adjustment of the load measurement" must always be performed after the fork arms have been changed. Otherwise, correct load measurement cannot be guaranteed.

Reversible fork arms (1) can be used to reach an additional lift height. The reversible fork arms are attached to the fork carriage in the same manner as standard fork arms. Loads may be lifted on and beneath the reversible fork arms. The mast is lifted and tilted in the same manner.

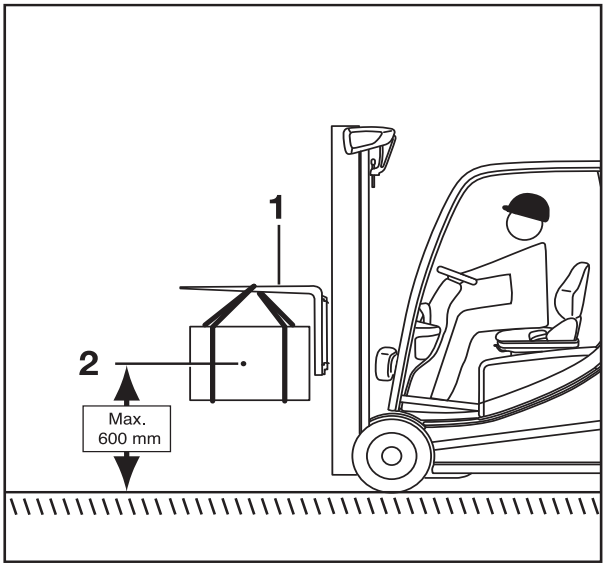

– Only work in reverse operation using reversible fork arms.
– Do not use a fork extension (variant).
– If the "load measurement" comfort feature (variant) is available, perform a "zero adjustment of the load measurement".
– To drive, raise the load centre of gravity (2) to a max. of 600 mm above the ground.
– Observe the information in the section entitled "Transporting suspended loads".

Malfunctions during lifting mode

Incorrect extension sequence

⚠ DANGER

Risk of accidents!

In the case of Hi-Lo lift masts (variant) and triplex lift masts (variant), an incorrect extension sequence may occur, i.e. the inner lift mast may extend before the free lift is complete. As a result, the overall height is exceeded and damage may occur in passageways or from low ceilings.

An incorrect extension sequence may, for instance, result from:

- The hydraulic oil temperature being too low.
- Blocking of the fork carriage in the inner lift mast.
- Blocking of the free lift cylinder.
- Blocking of the chain roller on the free lift cylinder.

– If the hydraulic oil temperature is too low, slowly actuate the lift mast functions several times in order to raise the oil temperature.

In the event that the fork carriage is blocked in the inner lift mast, or the free lift cylinder or chain roller are blocked, the cause of the

blockage must be eliminated before resuming work.

– Notify your service centre

Load chains not under tension

DANGER

Danger caused by a falling load!

– Make sure that the chain(s) does (do) not become slack when lowering the load.

Slack chains can, for instance, result from:

- Resting the fork carriage or the load on the racking.
- Fork carriage rollers blocking in the lift mast due to contamination.

– If the fork carriage or the load comes to an unexpected stop, lift the fork carriage until the chains are under tension again and lower the load at another suitable location.

– If the fork carriage rollers in the lift mast become blocked due to contamination, lift the fork carriage until the chains are under tension again. Remove the contamination before resuming work.

WARNING

Risk of injury!

– Observe the safety regulations for working on the lift mast, see the chapter entitled "Working at the front of the truck".

Hydraulic blocking function

The hydraulic blocking function ensures that all the functions of the working hydraulics are disabled whenever the seat switch in the driver's seat is unloaded.

If the driver's seat is vacated, the blocking function prevents hydraulic operation for the following functions:

- Lift the load
- Lower the load
- Tilt the lift mast

- Auxiliary hydraulic functions
- Steering

NOTE

Only the emergency steering function remains available.

Handling loads

Safety regulations when handing loads

The safety regulations for handling loads are shown in the following sections.

DANGER

There is a risk to life caused by falling loads or if parts of the truck are being lowered.

- Never walk or stand underneath suspended loads or raised fork arms.
- Never exceed the maximum load indicated on the capacity rating plate. Otherwise stability cannot be guaranteed!

DANGER

Risk of accident from falling or crushing!

- Do not step onto the forks.
- Do not lift people.
- Never grab or climb on moving parts of the truck.

DANGER

Risk of accident from a falling load!

- When transporting small items, attach a load safety guard (variant) to prevent the load from falling on the driver.
- Use a closed roof covering (variant) in addition.

▷

6210_003-030

Before picking up a load

Load capacity

The load capacity indicated for the truck on the capacity rating plate must not be exceeded. The load capacity is influenced by the load centre of gravity and the lift height as well as by the tyres, if applicable.

– The position of the capacity rating plate can be taken from the "labelling points".

WARNING

The figures show examples.

Only the capacity rating plates on the truck are valid!

The attachment of additional weights to increase the load capacity is prohibited.

DANGER

Risk of fatal injury from the truck losing stability!

Never exceed the maximum loads shown! These values apply to compact and homogeneous loads. If these values are exceeded, the stability and rigidity of the fork arms and lift mast cannot be guaranteed.

Improper or incorrect operation or the placement of persons to increase load capacity is prohibited.

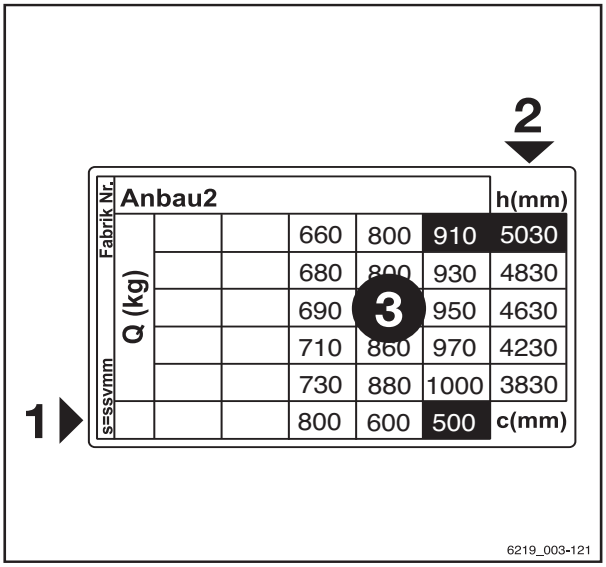

Capacity rating plate

1 Load distance from fork back
2 Permissible lift height
3 Weight of load to be lifted

Example

Weight of load to be lifted: 880 kg (3)

Load distance from fork back: 500 mm (1)

Permitted lift height: 5230 mm (2)

WARNING

Risk of accident from the truck losing stability!

The permissible loading of the attachments (variant) and the reduced load capacity of the combination of truck and attachment must not be exceeded.

– Observe the special capacity rating plate information shown on the truck and the attachment.

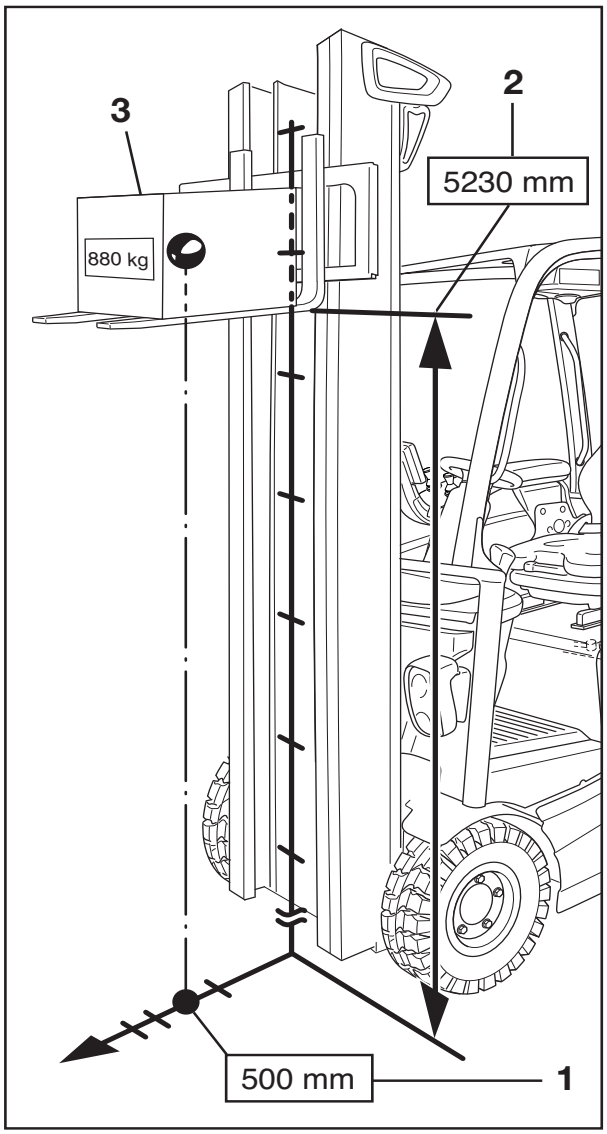

Picking up loads

To make sure that the load is securely supported, it must be ensured that the fork arms are sufficiently far apart and are positioned as far as possible under the load.

If possible, the load should rest on the back of the fork.

The load must not protrude too far over the fork tips, nor should the fork tips protrude too far out from the load.

Loads are to be picked up and transported as close to the middle as possible.

DANGER

Risk of accident from a falling load!

When transporting small items, attach a load safety guard (variant) to prevent the load from falling on the driver.

A closed roof covering (variant) should also be used.

Removable roof panels may not be removed.

Adjusting the fork

– Lift the locking lever (1) and move the fork arms to the desired position.

– Allow the locking lever to snap back into place.

The load centre of gravity must be midway between the fork arms.

– Only actuate the fork prong positioner (variant) when the fork is not carrying a load.

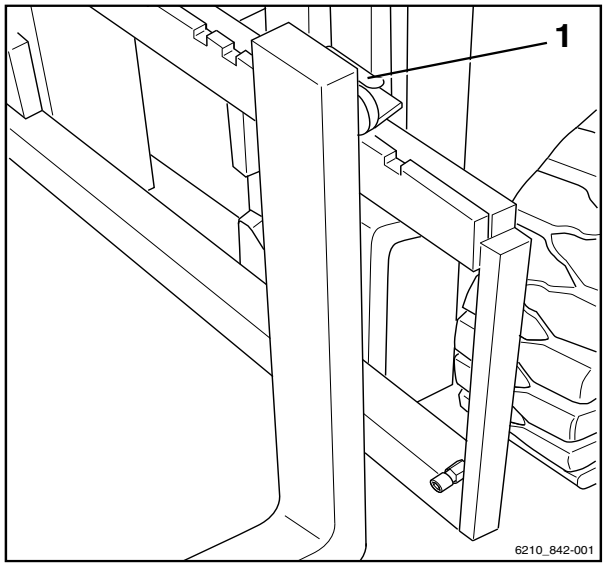

Danger area

The danger area is the area in which people are at risk due to the movements of the truck, its working equipment, its load-carrying equipment (e.g. attachments) or the load. Also included are the areas where loads could fall or working equipment could fall or be lowered.

DANGER

Risk of injury!

– Do not step on the fork.

DANGER

Risk of injury!

– Do not step under the raised forks.

DANGER

People may be injured in the danger area of the truck!

The danger area of the truck must be completely clear of all personnel, except the driver in his normal operating position. If persons fail to leave the danger area despite warnings:

– Cease work with the truck immediately.
– Secure the truck against use by unauthorised parties.

DANGER

Danger of death from falling loads!

– Never walk or stand underneath suspended loads.

Transporting pallets

As a rule, loads (e.g. pallets) must be transported individually. Transporting multiple loads at the same time is only permitted:

- when instructed by the supervisor and
- when the technical requirements have been met.

The driver must ensure proper condition of the load. Only safely and carefully positioned loads may be transported.

▷

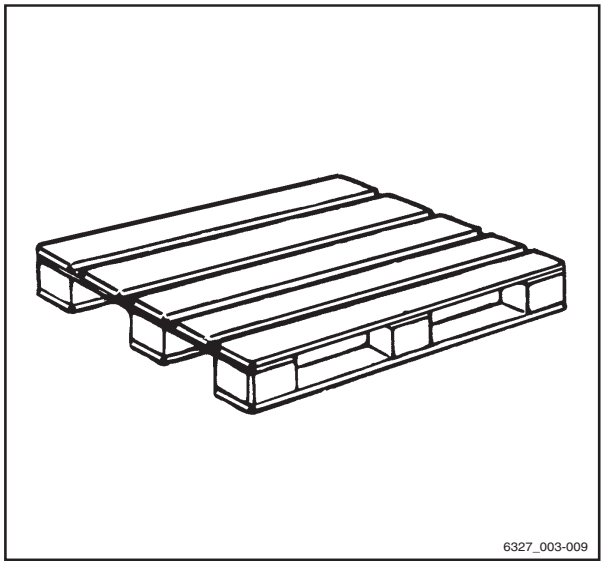

Transporting suspended loads

Before transporting suspended loads, consult the national regulatory authorities (in Germany, the employer's liability insurance associations).

National regulations may place restrictions on these operations. Contact the relevant authorities.

⚠ DANGER

Suspended loads that begin to swing can result in the following risks:

- Impaired braking characteristics and steering movement
- Tipping over the load wheels or drive wheels
- Tipping the truck at right angles to the drive direction
- Risk of crushing of guide persons
- Reduced visibility

⚠ DANGER

Loss of stability.

Slipping or swinging suspended loads can lead to a loss of stability and cause the truck to tip over.

– When transporting suspended loads, observe the following instructions

Instructions for transporting suspended loads:

- Swinging loads must be prevented by using the proper driving speed and driving style (careful steering, braking)
- Hanging loads must be hooked on to the truck in such a way that the harness cannot shift or release unintentionally and cannot be damaged
- When transporting suspended loads, suitable devices (e.g. guy wires or supporting poles) must be available so that accompanying persons can guide suspended loads and prevent the loads from swinging
- Take particular care to ensure that there is no one in the drive direction in the driving lane
- If, despite this, the load begins to swing, ensure that no person is placed at risk

▷

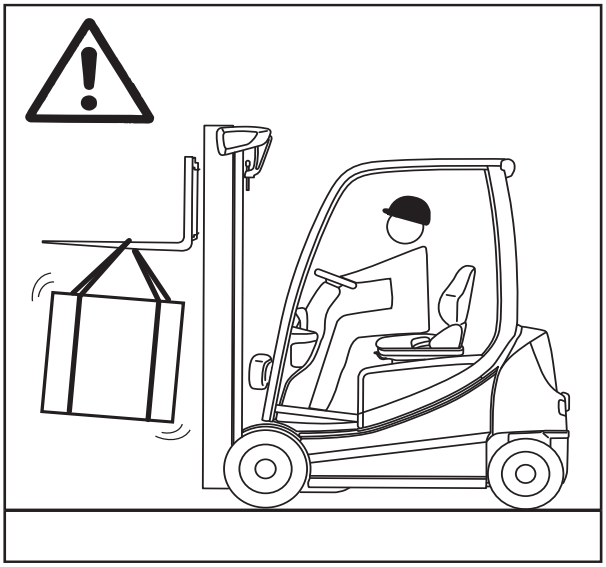

DANGER

Risk of accident!

When transporting suspended loads, never perform or end driving and load movements abruptly.

Never drive on slopes with a suspended load.

Transporting containers holding fluids as hanging loads is not permitted.

Picking up a load

DANGER

There is a risk to life from a falling load or from truck components being lowered.

- Never walk or stand underneath suspended loads or raised fork arms.
- Never exceed the maximum load values specified on the capacity rating plate. Otherwise, stability cannot be guaranteed.

- Only store pallets that do not exceed the specified maximum size. Damaged loading equipment and incorrectly formed loads must not be stored.
- Attach or secure the load to the lifting accessory so that the load cannot move or fall.
- Store the load so that the specified aisle width is not reduced by protruding parts.
- Approach the rack carefully, brake gently and stop just in front of the rack.

▷

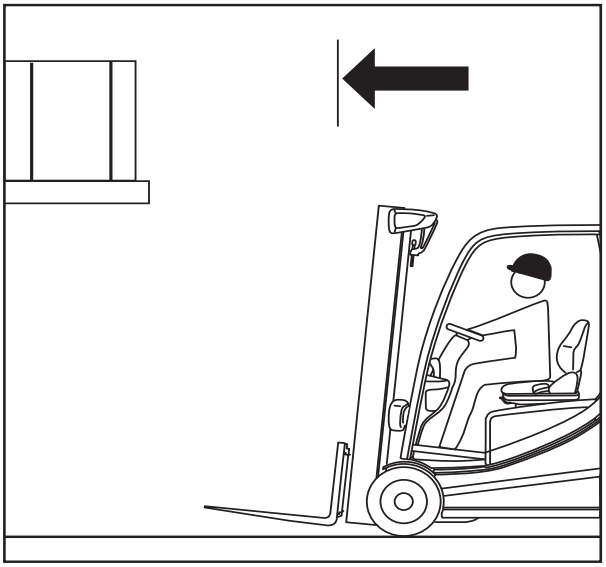

– Position the forks. ▷

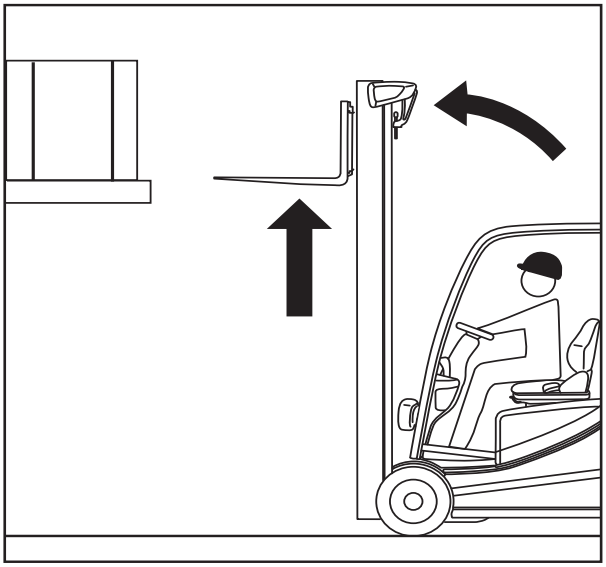

– Set the lift mast to vertical.

– Lift the fork carriage to the stacking height.

⚠ CAUTION

Risk of component damage!

When the fork is inserted into the rack, take care not to damage the rack or the load.

– Insert the fork as far under the load as possible. Stop the truck as soon as the fork back is resting on the load. The load centre of gravity must be midway between the fork arms. ▷

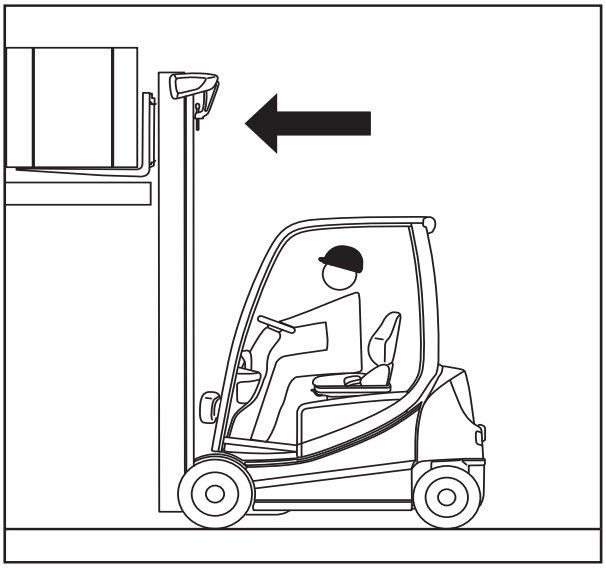

– Lift the fork carriage until the load is resting entirely on the fork. ▷

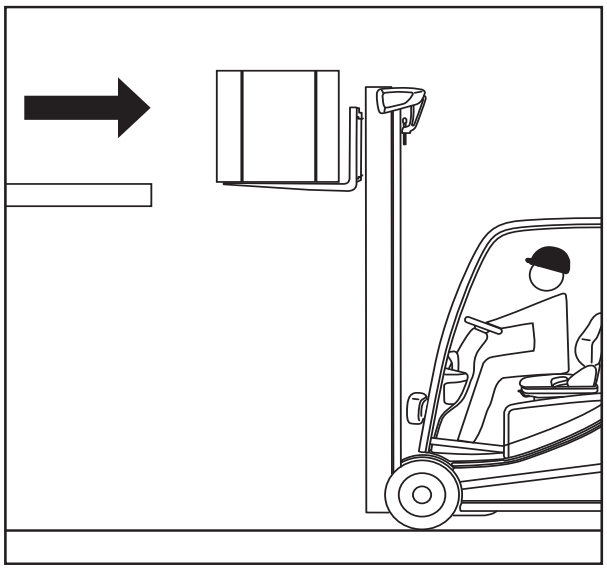

DANGER

Risk of accident!

– Beware of any people in the danger area.
– Ensure that the roadway behind you is clear.

DANGER

Due to the risk of tipping, never tilt the lift mast with a raised load!

– Lower the load before tilting the lift mast.

– Reverse carefully and slowly until the load is clear of the rack. Brake gently.

– Lower the load while maintaining ground clearance. ▷

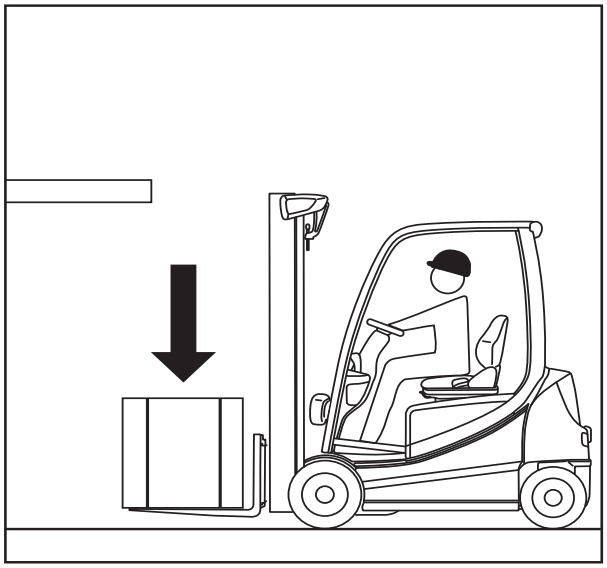

– Tilt the lift mast backwards. ▷

The load can be transported.

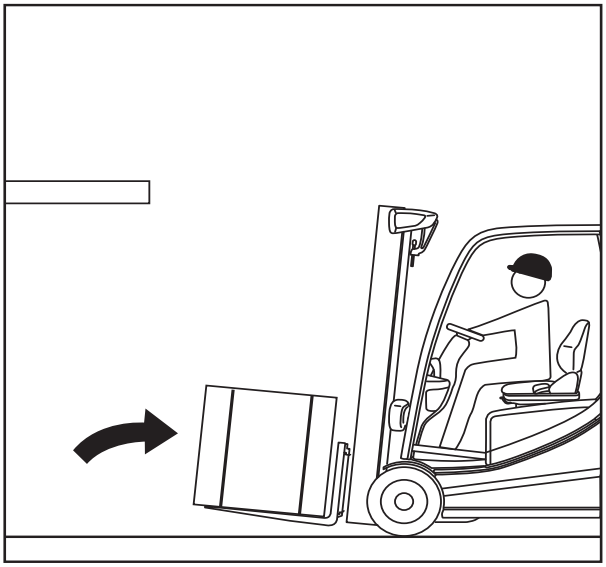

Transporting loads ▷

NOTE

Observe the information in the chapter entitled "Safety regulations when driving".

DANGER

The higher a load is lifted, the less stable it becomes. The truck can tip over. The load can fall. There is an increased risk of accidents.

Driving with a raised load and the lift mast tilted forward is not permitted.

– Only drive with the load lowered.
– Lower the load until ground clearance is reached (not over 300 mm).
– Only drive with the lift mast tilted backwards.

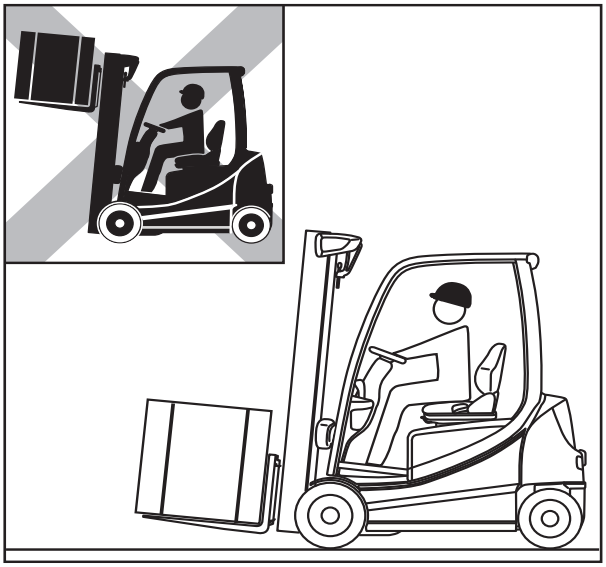

– Drive slowly and carefully around corners. ▷

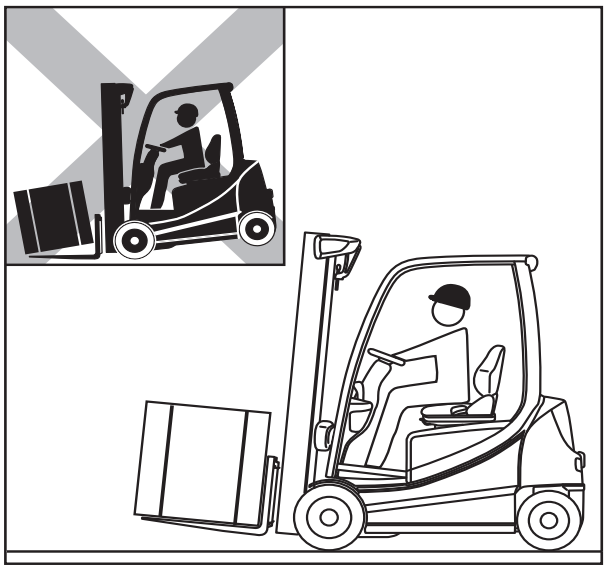

NOTE

Observe the information in the chapter entitled "Steering".

– Always accelerate and brake gently.

NOTE

Observe the information in the chapter entitled "Operating the service brake".

– Never drive with a load protruding to the side (e.g. with the sideshift)! ▷

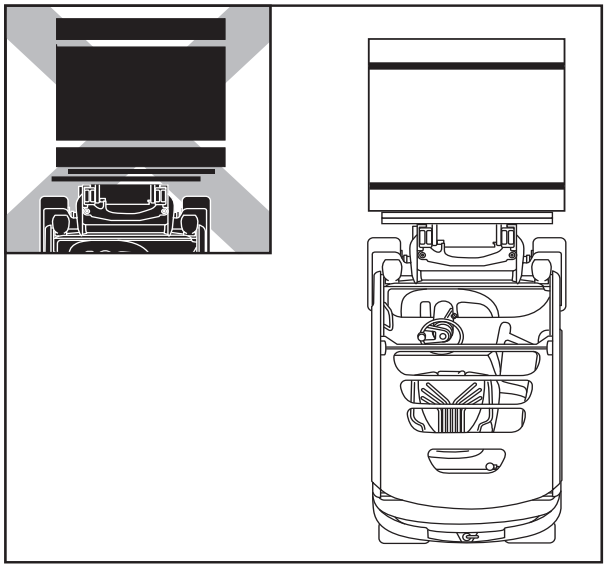

Shake function (variant)

NOTE

The shake function is intended only for short-term use, as it reduces the service life of the load chains due to the increased loading on them.

Description

The shake function of the hydraulics makes it easier for the driver to perform tasks such as emptying containers of bulk material. The

shake function moves the fork carriage quickly up and down via the "Lifting" function.

This function may only be used for a limited load and must not be used with a full nominal load.

Maximum permissible load for the shake function:

- Maximum 30% of the nominal load. If an attachment is being used, its weight must be subtracted from this value.

NOTE

The weight of an attachment can be seen on its nameplate.

Operation

To activate the shake function:

– Move the corresponding operating device for the "Lifting" function over the zero position four times in quick succession.

The fork carriage moves as normal. The shake function is active after the fourth time the operating device is moved.

– Continue to move the operating device back and forth.

The fork carriage moves up and down more quickly and more jerkily.

The intensity of the shaking is controlled via the vigour with which the operating device is moved. The more vigorously and frequently the operating device is moved, the more intense the shaking is.

NOTE

After the function has been activated, the driver has two seconds to start the shaking. If the two seconds elapse without the shake function being used, the shake function is deactivated again.

⚠ WARNING

The shake function remains active for two seconds following activation.

If the driver simply wants to lift or lower the load during this time, note that the fork carriage may move significantly more jerkily with the load than in normal operation. If the two seconds elapse without the shake function being used, the fork carriage can be moved normally again with the load.

The following section shows how the shake function is activated via the standard assignment for "lifting/lowering" using the different variants of the operating devices. If the "lifting/lowering" function is assigned differently on the operating device, the shake function is activated via this other assignment.

Joystick 4Plus:

– Move the Joystick 4Plus (1) back and forth between positions (A) and (B) four times. Then continue to move the component in the same way.

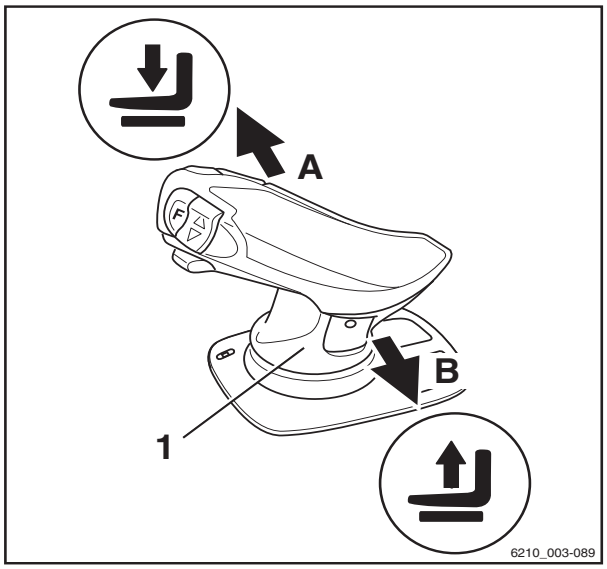

Double mini-lever:

– Move the 360° lever (2) back and forth between positions (A) and (B) four times. Then continue to move the component in the same way.

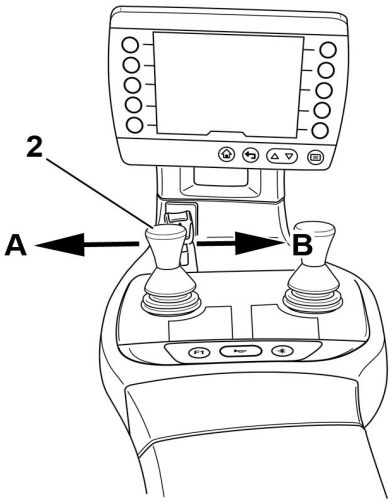

Triple mini-lever: ▷

– Move the 360° lever (3) back and forth between positions (A) and (B) four times. Then continue to move the component in the same way.

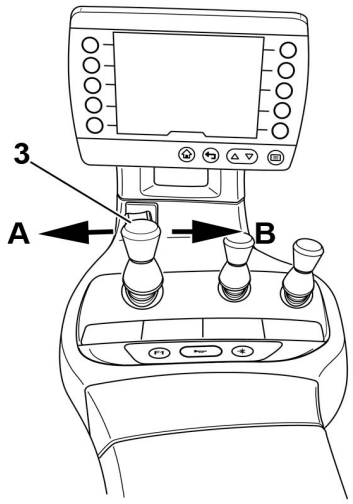

Quadruple mini-lever: ▷

– Move the operating lever (4) back and forth between positions (A) and (B) four times. Then continue to move the component in the same way.

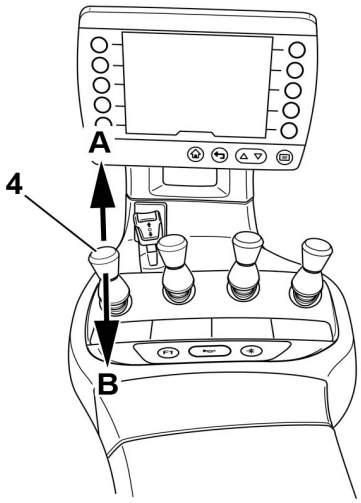

Fingertip: ▷

– Move the operating lever (5) back and forth four times. Then continue to move the component in the same way.

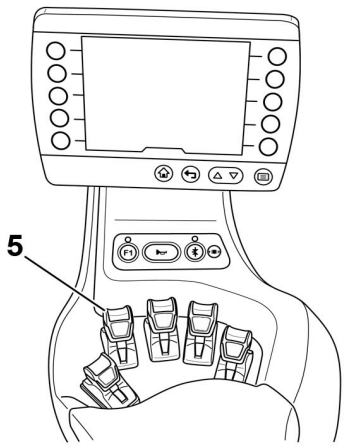

Setting down a load

DANGER

Risk of accident due to changed moment of tilt!

The load centre of gravity and the moment of tilt move due to tilting the lift mast forwards with a raised load or due to the load slipping. The truck may tip forwards.

- Only tilt the lift mast forwards with a raised lifting accessory when it is directly above the stack.
- When the lift mast is tilted forwards, take particular care to ensure that the truck does not tip forwards and that the load does not slip.

WARNING

Risk of accident from falling load!

If the fork or the load remains suspended during lowering, the load may fall.

- When removing from stock, move the truck far enough back so that the load and the fork can be lowered freely.

- Drive up to the stack with the load lowered in accordance with regulations.
- Set the lift mast to vertical.
- Lift the load to the stacking height.
- Drive the truck towards the rack carefully.

▷

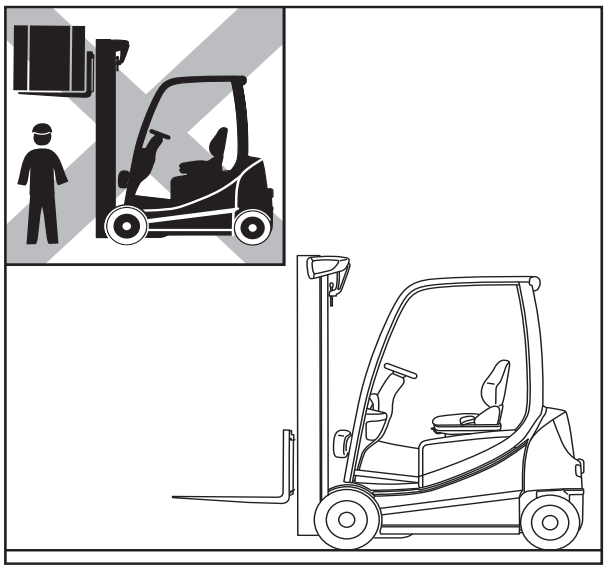

– Lower the load until it rests securely on the rack.

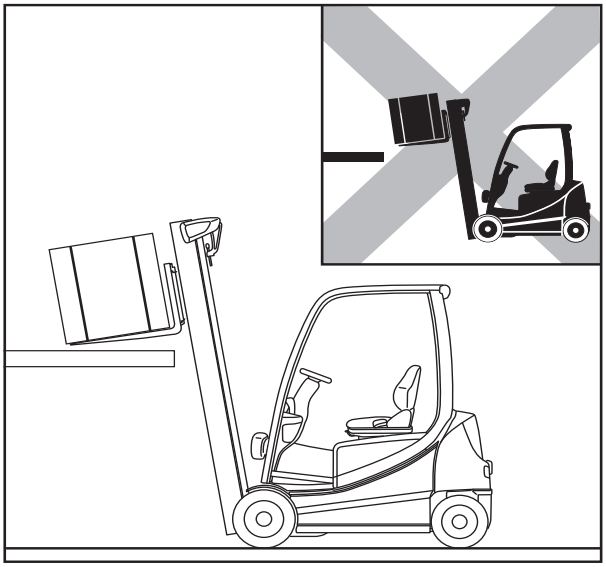

DANGER

Risk of accident!

– Beware of any people in the danger area.
– Ensure that the roadway behind you is clear.

– Move the truck back until the fork arms can be lowered without touching the stack.
– Lower the fork while maintaining ground clearance.
– Tilt the lift mast backwards and drive away.

Driving on ascending and descending gradients

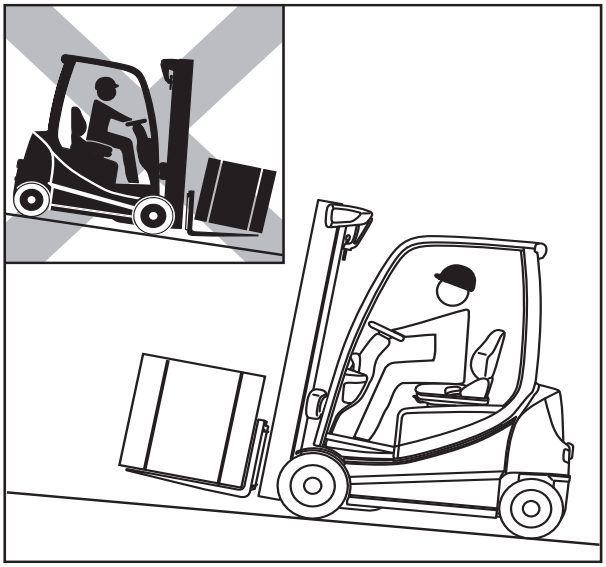

DANGER

Risk of fatal injury!

Driving on ascending and descending gradients carries special dangers!

– Always follow the instructions below.

– On ascending and descending gradients, the load must be carried facing uphill.
– It is only permitted to drive on ascending and descending gradients that are marked as traffic routes and that can be used safely.
– Ensure that the ground to be traversed is clean and provides a good grip.
– Do not turn on ascending and descending gradients.
– Do not drive onto or along ascending and descending gradients at an angle.
– Do not park the truck on ascending or descending gradients.
– In case of emergency, secure the truck with wedges so that the truck does not roll away.
– Reduce the driving speed on descending gradients.

It is not permitted to drive on long ascending and descending gradients greater than 15% due to the specified minimum braking and stability values.

– Before driving on ascending and descending gradients greater than 15%, consult the authorised service centre.

The process of placing loads into stock and removing loads from stock while on an ascending or descending gradient is not permitted!

– Always place loads into stock and remove loads from stock on a horizontal plane.

Driving on lifts

The driver may only use this truck on lifts with a sufficient load capacity and for which the operating company has been granted authorisation (refer to the section entitled "Definition of responsible persons").

⚠ DANGER

There is a risk of fatal injury from being crushed or run over by the truck.

– There must not be any persons already in the lift when the truck is driven into the lift.

– Persons are only permitted to enter the lift once the truck is secure, and must exit the lift before the truck is driven out.

▷

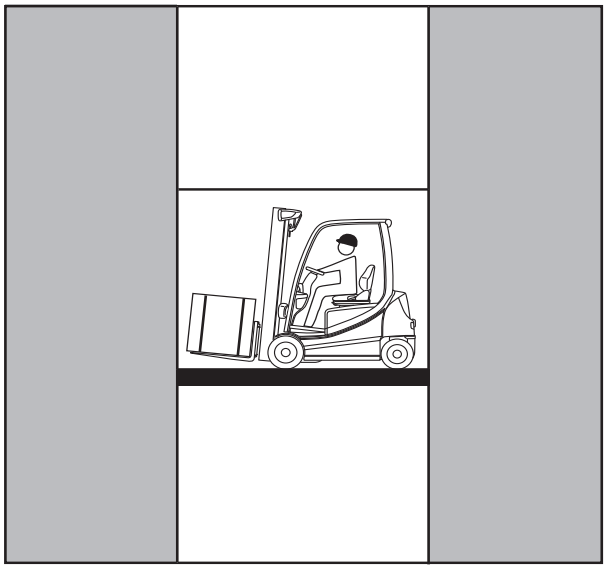

Determining the total actual weight

- Park the truck safely and switch it off.
- Determine the unit weights by reading the truck nameplate and, if necessary, the attachment (variant) nameplate and/or by weighing the load to be lifted.
- Add together the determined individual weights to obtain the total actual weight of the truck:

  Tare weight (1)

  \+ Max. permissible battery weight (2)

  \+ Ballast weight (variant) (3)

  \+ Net weight of attachment (variant)

  \+ Weight of the load to be lifted

  \+ 100 kg allowance for driver

  = Total actual weight

- Drive the truck into the lift with the forks facing forwards. Make sure not to touch the shaft walls.
- Park the truck securely in the lift and switch it off to prevent uncontrolled movements of the load or the truck.

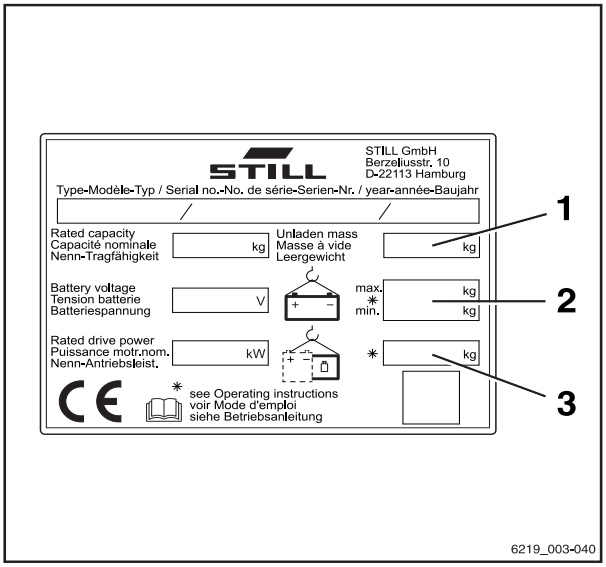

Driving on loading bridges

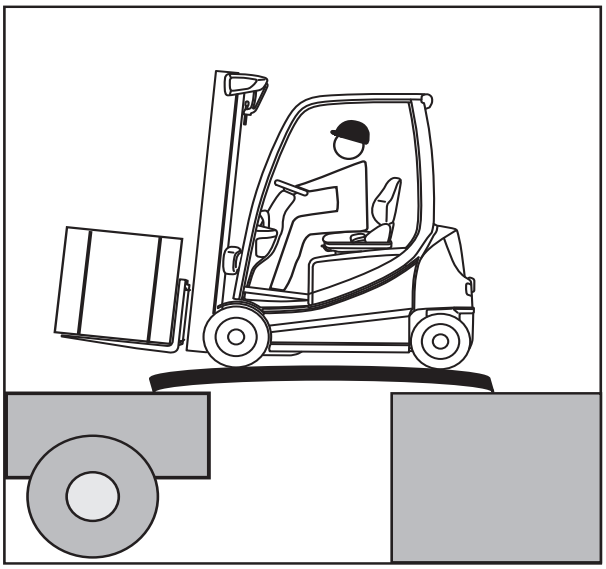

DANGER

Risk of accident from the truck falling!

Steering movements can cause the rear of the truck to veer off the loading bridge towards the edge. This may cause the truck to crash.

For three-wheel trucks, the useable area of the loading bridge must be enclosed so that the rear drive wheel does not fall through.

The lorry driver and the forklift truck driver must agree on the departure time of the lorry.

- Establish the departure time of the lorry.
- Determine the total actual weight of the truck.
- Before driving over a loading bridge, observe the company directive for the loading bridge.
- Make sure that the loading bridge is properly attached and secured and has a sufficient load capacity (e.g. lorry, bridge).
- Ensure that the lorry onto which you will be driving is secured to prevent it from shifting and that it can support the load of the truck.

Determining the total actual weight

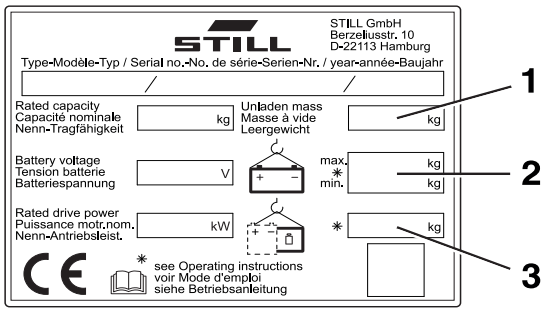

6219_003-040

- Park the truck safely.
- Determine the unit weights by reading the truck nameplate and, if necessary, the nameplate on the attachment (variant) and/or by weighing the load to be lifted.
- Add together the determined unit weights to obtain the total actual weight of the truck:

  Tare weight (1)

  \+ Max. permissible battery weight (2)

  \+ Ballast weight (variant) (3)

  \+ Net weight of attachment (variant)

  \+ Weight of the load to be lifted

  \+ 100 kg allowance for driver

  = Total actual weight

- Drive slowly and carefully on the loading bridge.

Dynamic load control

Reduction of dynamics according to the load weight

The authorised service centre can reduce the dynamics of the hydraulic movements to adapt them to the application requirements. The hydraulic system movement will then respond more slowly to the actuation of the operating device.

Low dynamics are suitable for applications in which impacts must be avoided, e.g. when moving fragile goods.

The standard setting is maximum dynamics: The hydraulic movement then immediately follows the actuation of the operating device. When the operating lever is released, the hydraulic movement is braked very quickly. The movement comes to a standstill.

When the minimum dynamic setting is used, the hydraulic movement accelerates slowly. It then follows the actuation of the operating device only slowly. When the operating lever is released, the hydraulic movement only decelerates slowly. It therefore continues to run for some time before the movement comes to a standstill.

⚠ WARNING

Risk of accident due to the slow response of the lifting system!

If a low dynamic is set, the lifting system responds after a delay when the operating device is released, even in an emergency. The fork carriage does not stop immediately but after approx. one second.

This behaviour may also occur when specific settings are configured for the "Dynamic Load Control" assistance functions.

– Work with particular attention and care.

"Silent Lift" fork wear protection (variant)

The "fork wear protection" variant ensures that the fork arms do not touch the ground. The correct height for inserting the forks into a pallet can also be configured.

– Contact the authorised service centre on this matter.

Lift mast vertical position (variant)

▷

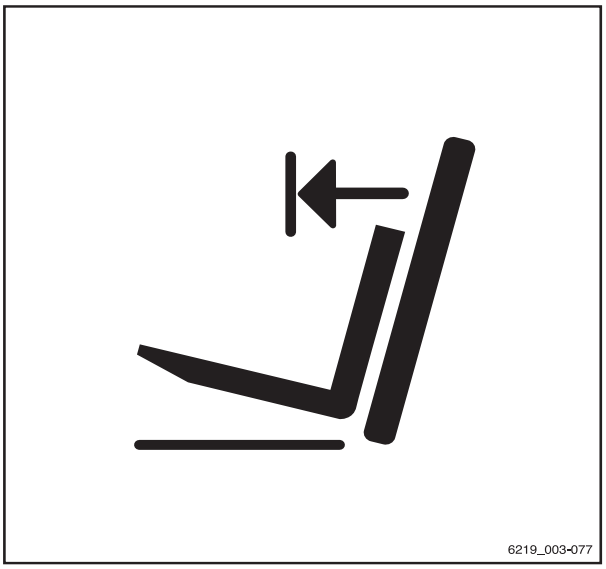

⚠ CAUTION

Risk of damage to property due to the lift mast colliding with racks or other objects!

– Before using the "automatic mast vertical positioning" comfort feature, position the truck at a sufficient distance from racks and other objects.

Goods such as paper rolls can be lowered vertically with precision using the "automatic mast vertical positioning" comfort feature, thereby avoiding damage when unloading. "Automatic mast vertical positioning" functions when tilting forwards. A further variant is available which also functions when tilting backwards. The tilt cylinders run into the end stops gently to prevent hard vibrations and impacts. Oscillating motions of the truck are minimised, thus increasing work safety. Automatic mast vertical positioning reduces wear on various components and therefore reduces repair costs.

– Push the "automatic mast vertical positioning" softkey .

The symbol appears in the display.

– Tilt back the lift mast until it reaches the end stop.

– Tilt the lift mast forwards.

The lift mast stops in the vertical position.

NOTE

The lift mast also stops in the vertical position if it is tilted forwards by ≥ 3° from a backward tilt.

Lift mast tilt angle display (variant)

Knowing the actual tilt angle of the lift mast makes it easier to place loads into stock and remove loads from stock. If the truck is equipped with the "lift mast tilt angle display" assistance function, the lift mast tilt angle (1) is shown on the display.

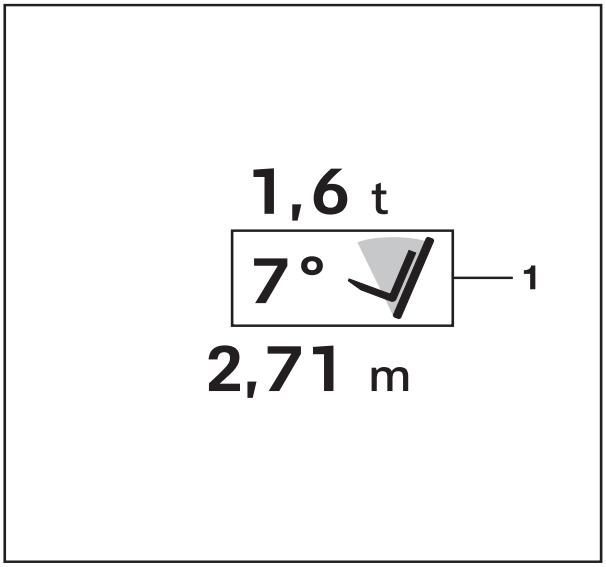

Overload protection (variant)

As soon as an excessive load is picked up, the "overload protection" variant warns the driver. The `Overload` message is shown on the display-operating unit.

The maximum load always refers to the sum of the load picked up plus any attachments present. The authorised service centre can configure the setting for the maximum load. However, the maximum load must not be higher than the nominal load.

The overload protection variant restricts the hydraulic functions as follows:

- If the nominal load is exceeded, the lifting capacity is reduced.
- If the nominal load is exceeded by more than 10%, the "lifting" function is restricted or disabled.

NOTE

The authorised service centre can restrict the "lifting" function.

Speed reduction when the fork carriage is raised (variant)

If the truck is equipped with this variant, the speed of the truck is reduced automatically

if the lift height of the fork carriage is above 500 mm.

Load measurement (variant)

Knowing the weight of the load to be transported gives the driver greater security. If the truck is equipped with the "load measurement" comfort feature, the weight of the lifted load is measured and displayed in the display-operating unit (1).

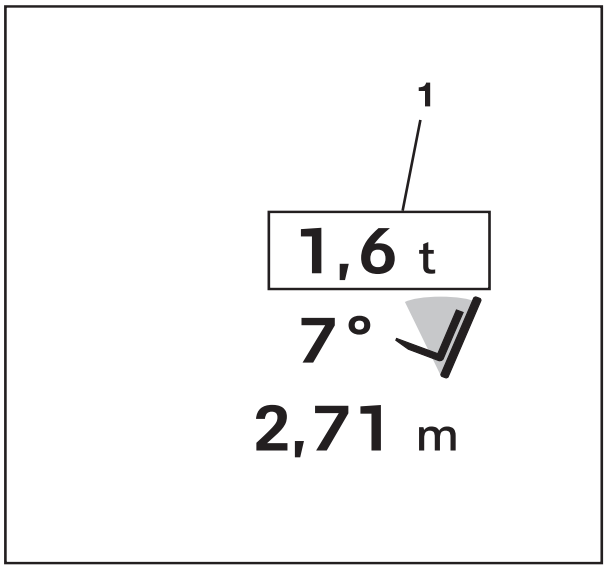

NOTE

The load measurement must be calibrated in order to ensure accuracy at all times. The "access authorisation for the fleet manager" is required for the calibration. This access is required:

- *After changing the fork arms,*
- *After fitting or changing attachments,*
- *If the displayed values are obviously incorrect.*

– To calibrate the load measurement, contact the authorised service centre.

– Observe the following safety information.

DANGER

Risk of accident from a falling load!

The load may fall if the load centre of gravity has not been taken into account or the load has not been picked up securely.

– Pick up the load securely; see the chapter entitled "Picking up loads".

CAUTION

If the weight determined by a load measurement exceeds the permissible residual load capacity of the truck, the truck cannot be operated safely.

– Set down and reduce the load immediately.

– If necessary, use another truck with sufficient load-bearing capacity.

Tare function (variant)

The tare function is a variant of the precision load measurement. The tare function ensures that the load measurement records only the load itself, and not the fork or the attachment.

This function is a sub-function of the "precision load measurement" variant.

NOTE

During the following process, the fork carriage must be lowered slightly. When doing so, the fork must not touch the ground, as otherwise the taring operation will be inaccurate.

– Set the lift mast to vertical.

– Raise the fork to a height of between 300 mm and 800 mm.

– Press the button .

The first menu level appears.

– Press the "Load" softkey .

– Press the "Precision load measurement" softkey .

– Press the "Tare" softkey (1).

The activation bar next to the "Tare" symbol lights up.

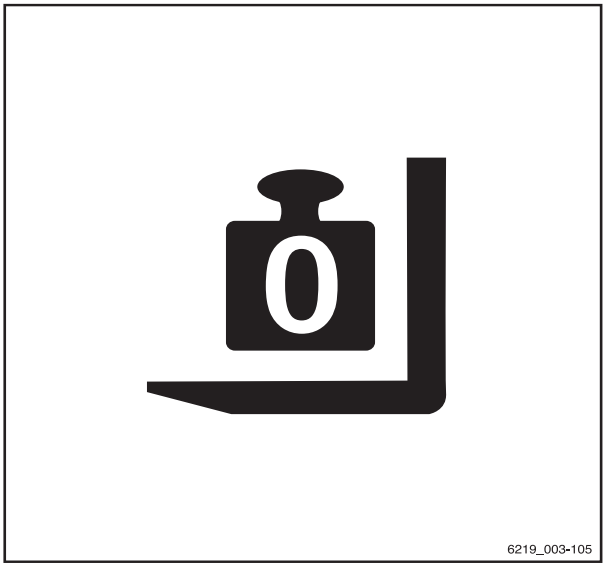

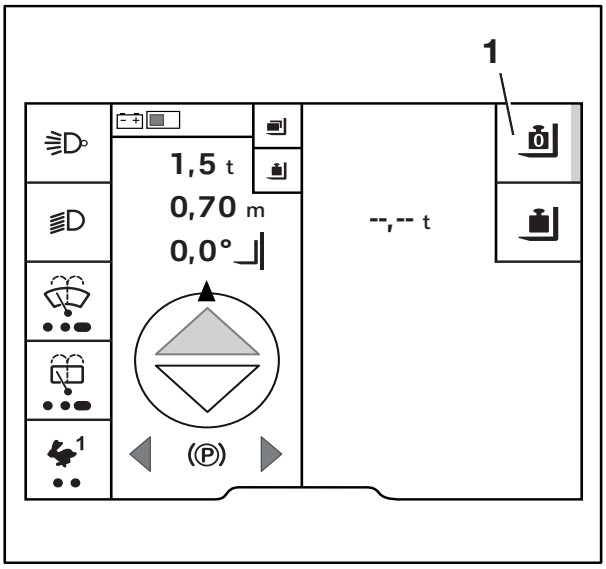

The `Lower fork slightly` prompt is displayed.

– Lower the fork carriage.

The value is calculated. The message `Zeroing ongoing` is displayed.

If the taring operation was successful, the value `0.00 t` is displayed. The activation bar next to the "Tare" symbol remains lit.

– If the taring operation was unsuccessful, follow the prompts on the display and repeat the process.

When a load is picked up, `--.-- t` is displayed.

The "precision load measurement" can be performed.

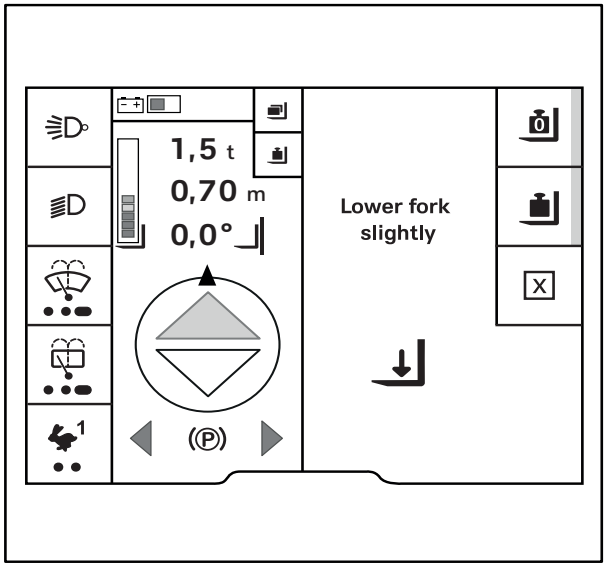

Precision load measurement (variant)

This function is available only if the truck is equipped with the "load measurement" variant.

The "precision load measurement" variant allows the weight of the load being picked up to be measured and displayed on the display-operating unit accurate to within 1% of the rated load capacity of the truck.

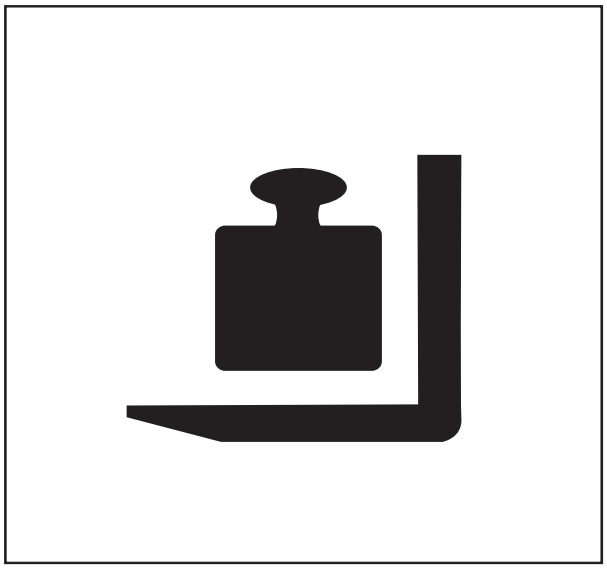

NOTE

In order to avoid a weighing error, tare the empty load pick up; see the section entitled "Tare function (variant)".

– Pick up the load safely.

– Press the button .

The first menu level appears.

– Press the "Load" softkey .

– Press the "precision load measurement" softkey (1).

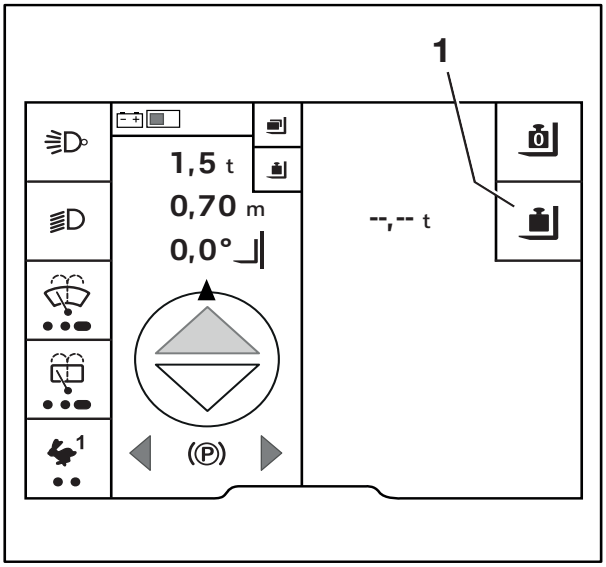

The `Lower fork slightly` prompt is displayed.

– Lower the fork carriage.

NOTE

Slowly lowering the fork carriage increases the measurement accuracy in trucks with multi-lever operation.

The value is calculated. The `Calc. ongoing` message appears.

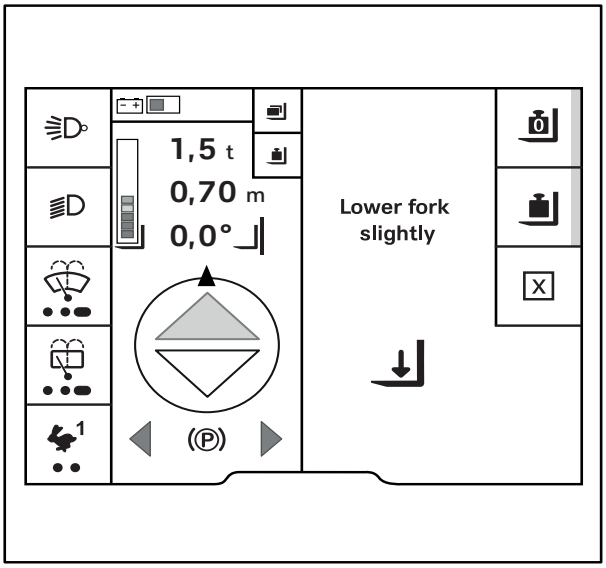

If the calculation was successful, the load (1) minus the tare value is displayed. ▷

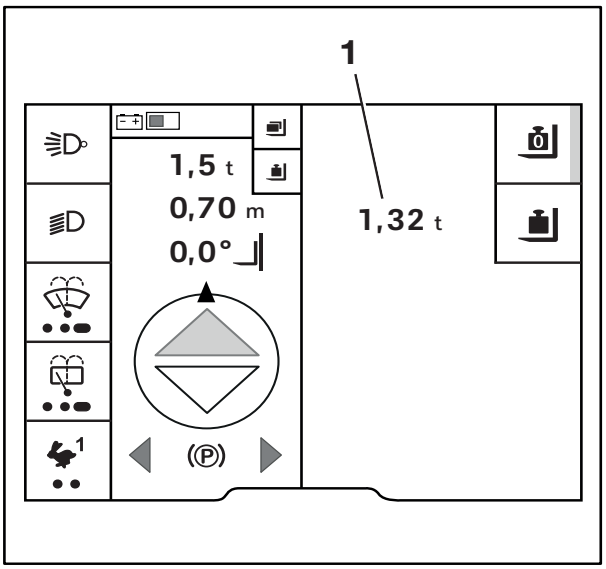

NOTE

If the tare function was not active, the load is shown including the fork carriage and load pick up.

– To delete the tare weight, press the soft-key (1). ▷

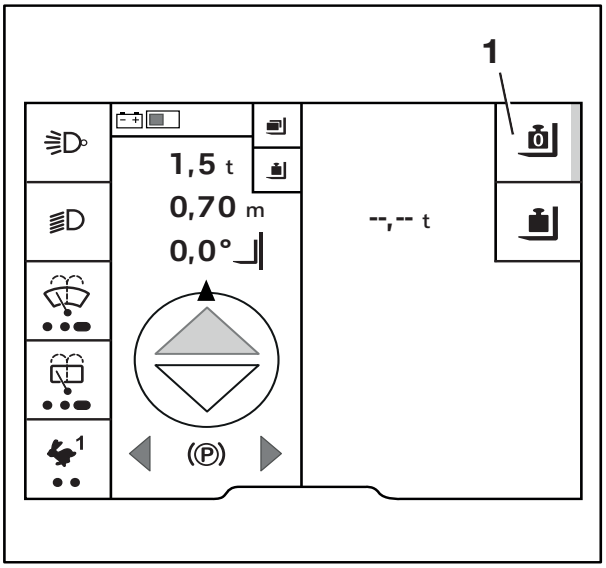

The tare weight is deleted. The activation bar next to the "Tare" symbol goes out. `--.--` `t` is shown on the display.

Total load (variant)

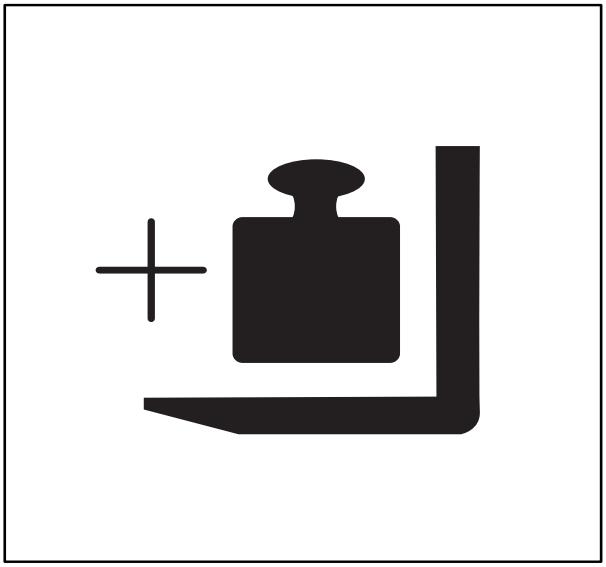

Use the "total load" variant to calculate the total weight of multiple loads. The "total load" is an additional function of the "load measurement". It records the individual loads and stores up to three total loads.

This allows, for example, three different containers to be laden and their loading weight to be determined. This function is helpful if, for instance, a container has a limited payload and you want to know when the permissible load weight has been reached.

This function is useful for comparing the loads indicated on delivery documents to the actual loads, for example.

The procedure for adding up the total load is as follows:

1 Pick up the load and call up the load menu,
2 Measure the load,
3 Add/subtract the load.

WARNING

Risk to stability.

If the weight determined by a load measurement exceeds the permissible residual load capacity of the truck, the truck cannot be operated safely.

– Do not lift the load higher than 800 mm.
– Set down and reduce the load immediately.
– If necessary, use another truck with sufficient load-bearing capacity.

NOTE

Lift the load to a height of between 300 mm and 800 mm, since the load must subsequently be lowered slightly for the weighing process. If the weighing process establishes that the load is too heavy, the load must not be lifted higher than 800 mm. The forks must not touch the ground.

Picking up the load and calling up the load menu

– Pick up the load safely.

– Press the button ▤.

The first menu level appears.

– Press the "Load" softkey .

– Press the "Total load" softkey .

A total of three load totals can be saved.

The total load is explained here using disk space 1.

– Press the 1 softkey.

▷

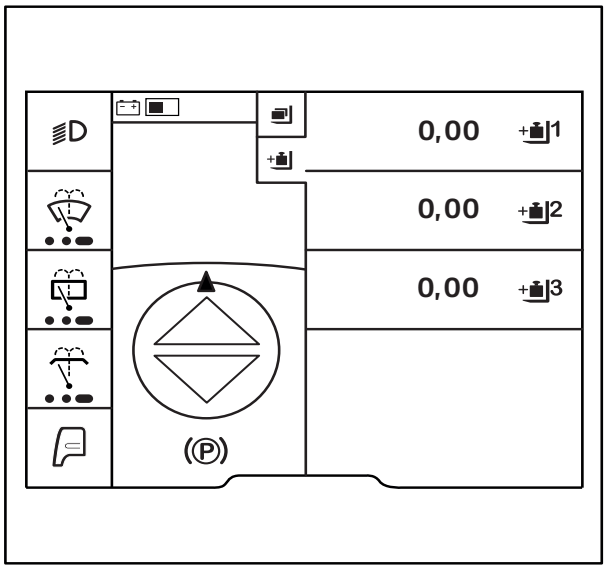

The "Total load" menu 1 appears.

This menu provides the following functions:

- Tare
- Precision load measurement
- + Add a load
- – Subtract a load
- Delete load summation

Measuring the load

– Press the "Precision load measurement" Softkey . Measure the load.

▷

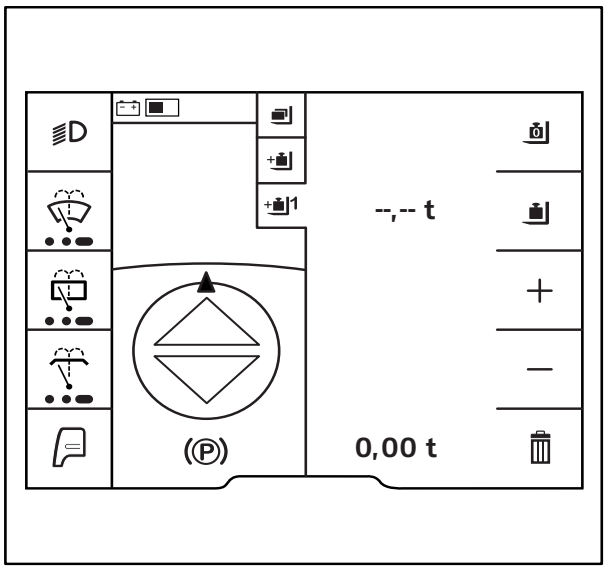

The `Lower fork slightly` ⤓ prompt is displayed.

– Lower the fork carriage.

The value is calculated. The `Calc. ongoing` ↻ message appears.

If the calculation was successful, the load is displayed.

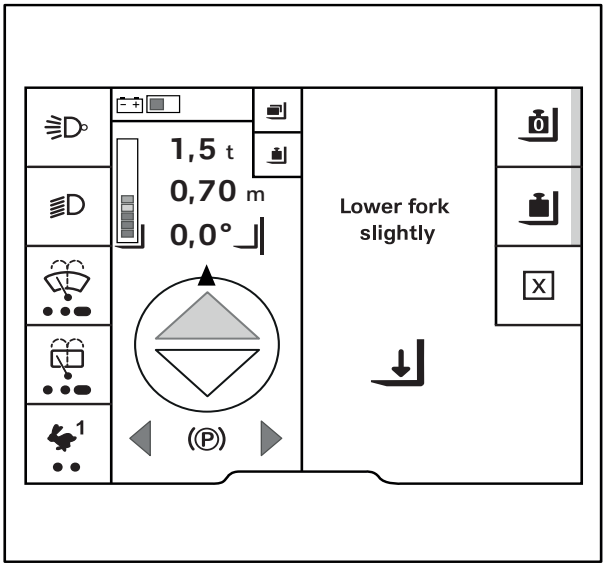

Adding a load

– Pick up the load to be added.

– Press the + Softkey.

– Measure the load as described previously.

– To save, press the ▤ button.

Subtract a load

– Pick up the load to be subtracted.

– To subtract the current load, press the − Softkey.

– Measure the load as described previously.

The current load is subtracted from the sum.

– To save, press the ▤ button.

NOTE

If, for instance, this load was added to the wrong total load, it is also possible to perform a subtraction with the previously measured and added load.

Delete total load

– To delete the total load, press the 🗑 soft-key.

The `Clear total load?` message ? is displayed.

– To delete, press the ☑ Softkey.

– To cancel, press the ☒ Softkey.

Attachments

Fitting attachments

If the truck is equipped with an integrated attachment (variant) ex works, observe the specifications in the STILL operating instructions for integrated attachments.

If attachments are fitted at the place of use, observe the specifications in the operating instructions from the attachment manufacturer.

If an attachment is not delivered together with the truck, observe the manufacturer's specifications and the operating instructions from the attachment manufacturer.

Before initial commissioning, arrange for the function of the attachment and the visibility from the driver's position with and without a load to be checked by a competent person. If the visibility is deemed insufficient, use visual aids such as mirrors, a camera/monitor system etc.

– Observe the following warnings.

⚠ DANGER

Risk of fatal injury from falling load!

If clamping attachments or attachments that exert force do not have a second operating function (lock), the load may be released unintentionally and fall.

– Make sure that the second operating function (lock) is available for actuation.
– When retrofitting such attachments, a second operating function (lock) must also be fitted.

⚠ DANGER

Risk of fatal injury from falling load!

When installing a clamp with an integral sideshift function, ensure that the clamp does not open when the sideshift is actuated.

– Notify your authorised service centre before installation.
– Never grab or climb on moving parts of the truck.

WARNING

Risk of accident due to incorrect labelling!

Incorrect or missing labelling can result in accidents when attachments are operated.

If the truck is not fitted with an attachment-specific residual load capacity rating plate and if the operating devices are not marked with the relevant pictograms, the truck must not be used.

- Use only CE-certified attachments that have operating instructions and the required identification labels.
- Have an attachment-specific residual load capacity rating plate fitted to the truck.
- Have the operating devices relabelled.
- Arrange for the authorised service centre to adapt the hydraulic system to the requirements of the attachment (e.g. adjust the pump motor speed).

NOTE

If the required labelling is not provided, contact the authorised service centre promptly.

Alternating operation using an electrical switch valve

If non-integrated attachments for alternating operation are used in conjunction with an electrical switch valve for the 5th and 6th hydraulic function, the electrical switch valve must operate at 12 V.

- Contact the authorised service centre if necessary.

Plug connectors on the lift mast

– Before fitting the attachment, depressurise the hydraulic system.

⚠ CAUTION

Risk of damage to components!

Open connections on plug connectors (1) can become dirty. Dirt can enter the hydraulic system. The plug connectors can become stiff.

– Once the attachment has been disassembled, use the protective caps to seal the plug connectors.

▷

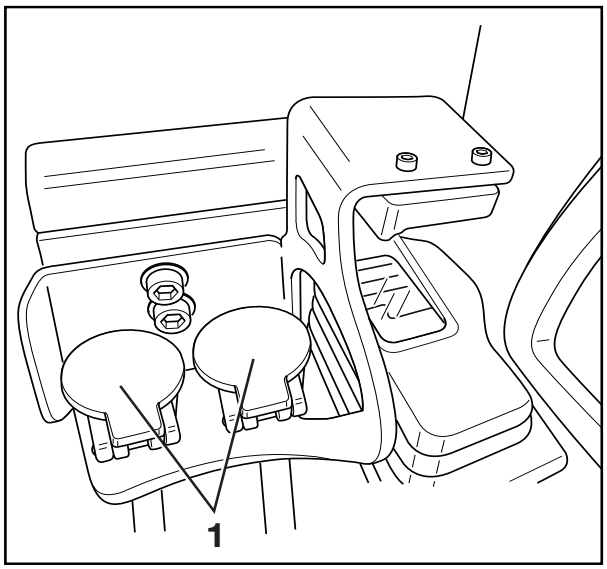

Mounting attachments

Only authorised persons may mount the attachment and connect the energy supply to the attachment.

– Observe the specifications of the manufacturer and supplier of the attachment.

– After each installation, the attachment must be checked for correct operation prior to initial commissioning.

NOTE

Please observe the definition of the responsible person: "authorised person".

Load capacity with attachment

The permissible load capacity of the attachment and the permissible load (load capacity and load moment) of the truck must not be exceeded by the combination of the attachment and the payload. Comply with the specifications of the manufacturer and supplier of the attachment.

– Observe the residual load capacity rating plate; see the chapter entitled "Picking up a load using attachments".

Depressurising the hydraulic system

WARNING

The movements of the load lift system present a risk of crushing.

During the process described below, the fork carriage or the lift mast can only be moved slightly.

– Do not reach into or stand below the components of the load lift system.

NOTE

The hydraulics are depressurised using a wizard on the display-operating unit. Access to the settings menu is only available if the truck is at a standstill and the parking brake is applied. If the parking brake is released prematurely, the settings menu will close. Access requires authorisation at service level. If this function is required for daily operation, contact your authorised service centre. The authorised service centre can enable the function for the fleet manager or driver.

Non-clamping attachments are connected to the third hydraulic circuit via the plug connectors (1) on the fork carriage and are controlled via the "5th hydraulic function".

If the truck is equipped with multi-lever operation, the attachments can also be controlled via the "6th hydraulic function".

– Before attaching or detaching attachments, release the pressure from the plug connectors (1) and the other hydraulic circuits.

Attachments must only be installed by competent persons. The specifications provided by the manufacturer and supplier of the attachments must be observed during installation of the attachments.

– Before each use of the attachment, check and ensure the functions of the installed attachment.

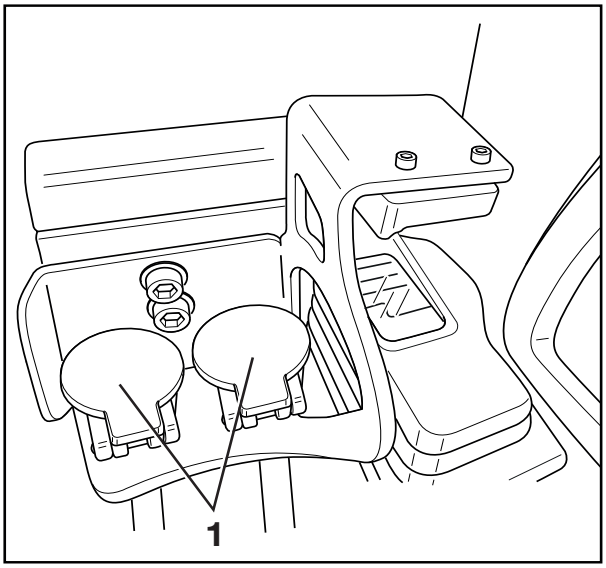

Plug connectors on the lift mast

Starting the wizard

– Apply the parking brake.

– Switch on the truck.

- Press the button ▤.
- Press the "Settings" Softkey ⚙.
- Activate the "Access authorisation for the fleet manager".
- Press the `Service` softkey.

▷

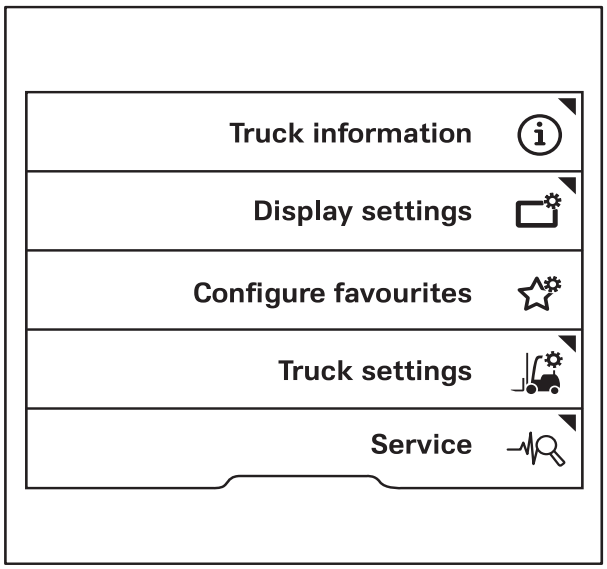

- Press the scroll keys △ ▽ until the `Relieve hydraulics` menu appears.
- Push the `Relieve hydraulics` soft-key.

▷

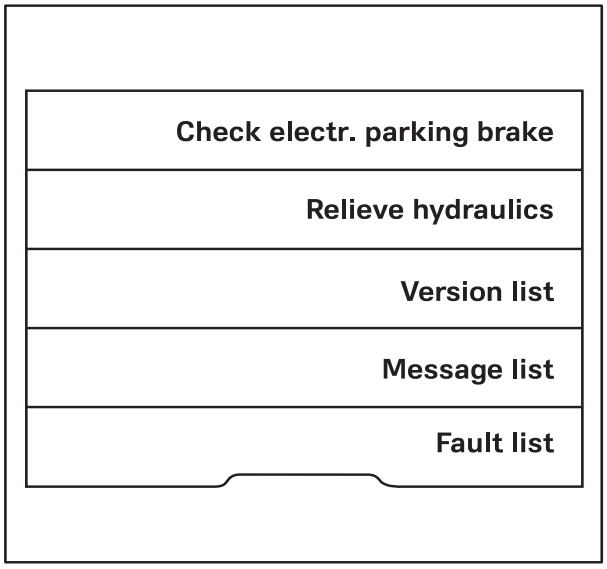

The following message appears: `Caution, the lift mast may move! !` ▷

– To confirm, push the ☑ softkey.

Press the ☒ softkey to exit the wizard.

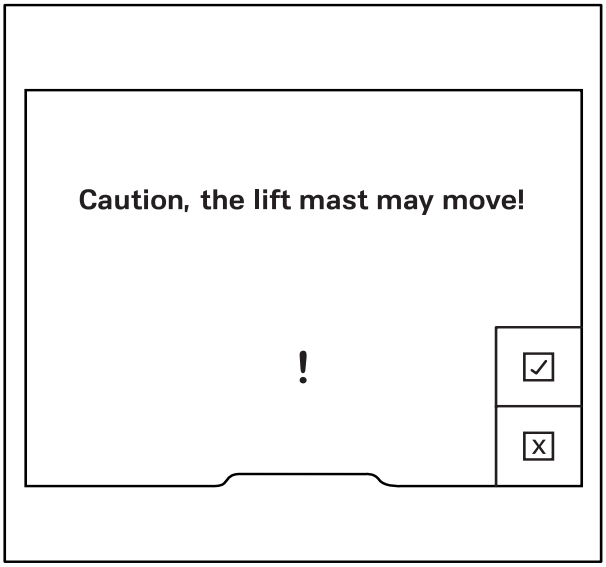

The following message is displayed: `Disengage all hydraulic axles, then switch off the truck !` ▷

– Depressurise the hydraulics.

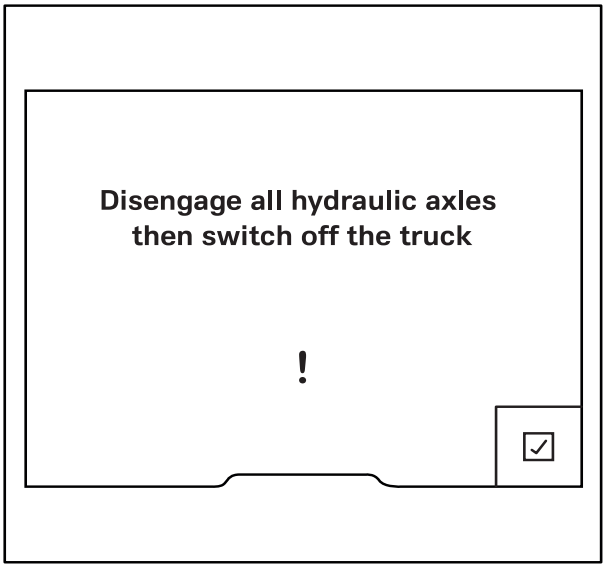

NOTE

Do not move the steering wheel while depressurising the hydraulics. Otherwise the hydraulic system will build up pressure again. As soon as pressure has built up in the hydraulic system again, the function for relieving the hydraulics becomes inactive.

Depressurising the hydraulic circuits for the basic functions

The basic functions include the first four hydraulic functions. The basic functions are controlled via the first two hydraulic circuits.

The basic functions are:

- Lifting the fork carriage
- Lowering the fork carriage
- Tilting the lift mast forwards
- Tilting the lift mast backwards

– Actuate the operating levers for controlling the hydraulic functions once in the directions of the arrows as far as the end positions.

The hydraulic circuits of the basic functions are now depressurised.

Depressurising the hydraulic circuits for the "5th and 6th hydraulic function"

If the truck has a "5th and 6th hydraulic function", their hydraulic circuits must also be depressurised. The procedure is similar to the depressurisation of the hydraulic circuits for the basic functions. In addition, the hydraulic circuits are depressurised in the same way as the attachments are operated.

The hydraulic circuits for the "5th and 6th hydraulic functions" are actuated via the corresponding buttons on the operating devices.

- Function key for the "5th function" with mini-lever control and Fingertip operation
- Function keys for the "5th function" and "6th function" with multi-lever operation
- Shift key "F" with Joystick 4Plus operation (hereinafter referred to as the "button")

– Press and hold the button (1) for the operating devices.

– Again, actuate the operating levers for controlling the hydraulic functions once in the directions of the arrows as far as the end positions.

– With Joystick 4Plus operation, also actuate the slider and the rocker buttons.

The hydraulic circuits for the "5th hydraulic function" and, with multi-lever operation, the "6th hydraulic function" (variants) are now depressurised. The plug connectors on the lift mast are depressurised.

– Release the button (1).

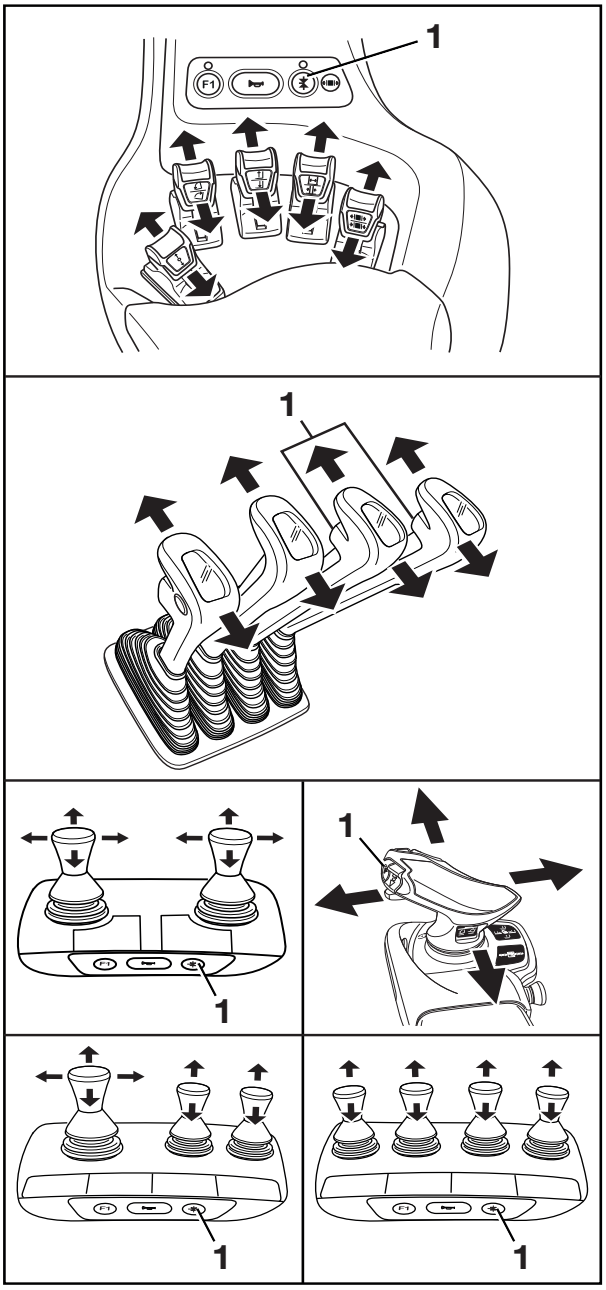

Special feature for clamping attachments

NOTE

If a clamping attachment is fitted, please observe the following:

- *Depressurising the hydraulic circuit for clamping attachments is performed in the same way as opening and closing the clamp.*
- *Loosen the clamp locking mechanism; see the relevant sections related to the clamp locking mechanism.*
- *Push the operating device once in the "Open" direction.*
- *Push the operating device once in the "Close" direction.*

Completing the depressurisation

– After the hydraulics have been depressurised, push the ☑ softkey to confirm.

– Switch off the truck.

– Install the attachment.

– Switch on the truck.

The function for depressurising the hydraulics is inactive. The truck is ready for operation.

– Check and ensure all functions of the installed attachment.

General instructions for controlling attachments

Attachments can be controlled via the first four hydraulic functions but also as a variant via the 5th or 6th function. The 5th or 6th function is activated via a button on the operating device and by moving the operating device or additional push buttons.

The way in which attachments (variant) are controlled depends on the operating devices included in the truck's equipment.

Possible equipment variants include:

- Multi-lever
- Multi-lever with a 5th or 6th function (variant)
- Double mini-lever
- Double mini-lever with a 5th function (variant)
- Triple mini-lever
- Triple mini-lever with a 5th function (variant)
- Quadruple mini-lever
- Quadruple mini-lever with a 5th function (variant)
- Fingertip
- Fingertip with a 5th function (variant)
- Joystick 4Plus
- Joystick 4Plus with a 5th function (variant)

– To control attachments, see the sections relating to the respective operating devices in this chapter.

⚠ WARNING

Use of attachments can give rise to additional hazards such as a change in the centre of gravity, additional danger areas etc.

Attachments must only be deployed for their intended use as described in the relevant operating instructions. Drivers must be taught how to operate the attachments.

Loads may only be picked up and transported with attachments if the loads are securely grasped and attached. If necessary, the loads must also be secured against slipping, rolling away, falling over, swinging and tipping over. Note that any change to the location of the load centre of gravity will affect the stability of the truck.

– Observe the capacity rating plate for the attachments being used.

NOTE

Further variants and functions are available in addition to the functions described below. The directions of movement can be seen in the pictograms on the operating devices. All the attachments described fall into the category of equipment variants. An exact description of the respective movements or actions of the attachment fitted can be found in the relevant operating instructions.

Controlling attachments using multi-lever operation

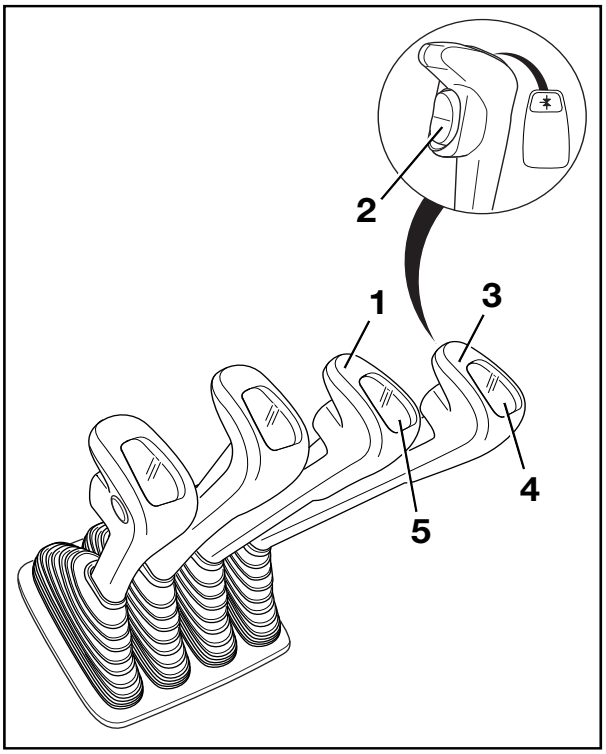

In this version, the attachments (variant) are controlled using the operating levers (1, 3) and the function switch (2). The adhesive labels bearing the pictograms for the hydraulic functions (4, 5) are affixed on the operating levers.

– Observe the pictograms on the adhesive label (4) or (5).

The pictograms are arranged according to the direction of movement of the operating lever (1) or (3).

The following applies:

– Move the operating lever forwards.

The attachment moves in the direction of movement shown in the upper part of the pictogram.

– Move the operating lever backwards.

The attachment moves in the direction of movement shown in the lower part of the pictogram.

– Note the following attachment functions and pictograms.

Picto-gram	Attachment function
	Move the side shift frame or fork forwards
	Move the side shift frame or fork backwards
	Move the sideshift to the left
	Move sideshift to the right
	Adjust fork arms: open
	Adjust fork arms: close
	Release load retainer
	Clamp load retainer
	Release auxiliary hydraulics
	Push off the load
	Pull in the load

Picto-gram	Attachment function
	Rotate to the left
	Rotate to the right
	Tip shovel over
	Tip shovel back
	Swivel the fork to the left
	Swivel the fork to the right

NOTE

The pictograms are affixed according to the attachment fitted at the factory. If an attachment with different functions is fitted, the authorised service centre must check that the pictograms bear the correct representation and must change them if necessary.

Controlling attachments using multi-lever operation and the 5th and 6th function

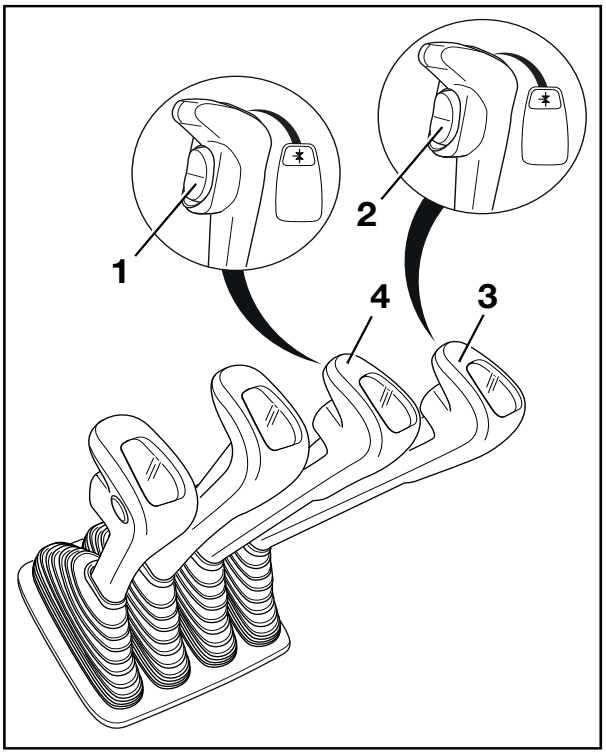

The function keys for the "5th and 6th function" (1, 2) and the operating levers (3, 4) are used to control the "5th function" or the "6th function".

The central and bottom parts of the pictograms on each operating lever show the function that is activated by that lever. The top part of the pictogram shows that the attachment is equipped with the "5th function" or the "6th function".

The following applies:

– Move the operating lever (3, 4) forwards.

The attachment moves in the direction of movement shown in the central part of the pictogram.

– Move the operating lever (3, 4) backwards.

The attachment moves in the direction of movement shown in the lower part of the pictogram.

– Press and hold the switch (1).

The additional function of the attachment is activated and can be controlled as the "5th function" with the operating lever (4).

NOTE

The movement/action of the "5th function" can be found in the operating instructions of the attachment that is fitted.

– Press and hold the switch (2).

The additional function of the attachment is activated and can be controlled as the "5th function" or "6th function" with the operating lever (3).

NOTE

The movement/action of the "5th function" or "6th function" can be found in the operating instructions of the attachment that is fitted.

– Note the following attachment functions and pictograms.

Picto-gram	Attachment function
	Move the side shift frame or fork forwards
	Move the side shift frame or fork backwards
	Move the sideshift to the left
	Move sideshift to the right
	Adjust fork arms: open
	Adjust fork arms: close
	Push off the load
	Pull in the load
	Rotate to the left
	Rotate to the right
	Tip shovel over
	Tip shovel back
	Swivel the fork to the left
	Swivel the fork to the right

NOTE

The pictograms are affixed according to the attachment fitted at the factory. If an attachment with different functions is fitted, the authorised service centre must check that the pictograms bear the correct representation and must change them if necessary. If the attachment is known, the relevant symbol is stuck on the panelling in front of the corresponding operating lever.

Controlling attachments using a double mini-lever

In this version, the attachments (variant) are controlled using the "attachments" cross lever (1). The adhesive label bearing the pictograms for the hydraulic functions (2) is affixed at the designated point.

- If the adhesive label becomes illegible or is missing, please contact your authorised service centre.
- Observe the pictograms for the attachment functions on the adhesive label (2).

The pictograms on the "attachments" cross lever (1) show the respective functions that are activated by this lever.

The pictograms are arranged according to the direction of movement of the "attachments" cross lever (1).

The following applies:

- Move the "attachments" cross lever(1) in the direction of arrow (A), (B), (C) or (D).

The attachment moves accordingly in the directions (A), (B), (C) or (D) as shown in the pictogram.

Pictogram	Attachment function
	Move the side shift frame or fork forwards
	Move the side shift frame or fork backwards
	Move the sideshift to the left
	Move sideshift to the right
	Adjust fork arms: open
	Adjust fork arms: close
	Release load retainer
	Clamp load retainer
	Open clamps
	Close clamps
	Rotate to the left

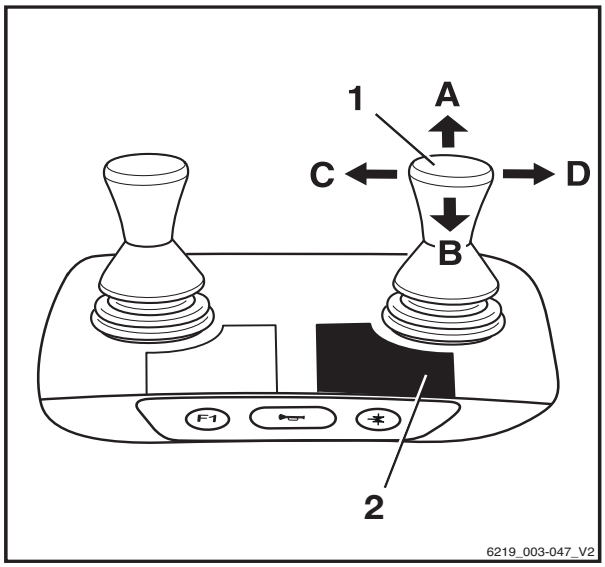

Picto-gram	Attachment function
	Rotate to the right
	Tip shovel over
	Tip shovel back

NOTE

The pictograms are affixed according to the attachment fitted at the factory. If an attachment with different functions is fitted, the authorised service centre must check that the pictograms bear the correct representation and must change them if necessary.

– For actuation of the clamp locking mechanism, see the section entitled "Clamp locking mechanism (variant)".

Controlling attachments using the double mini-lever and the 5th function

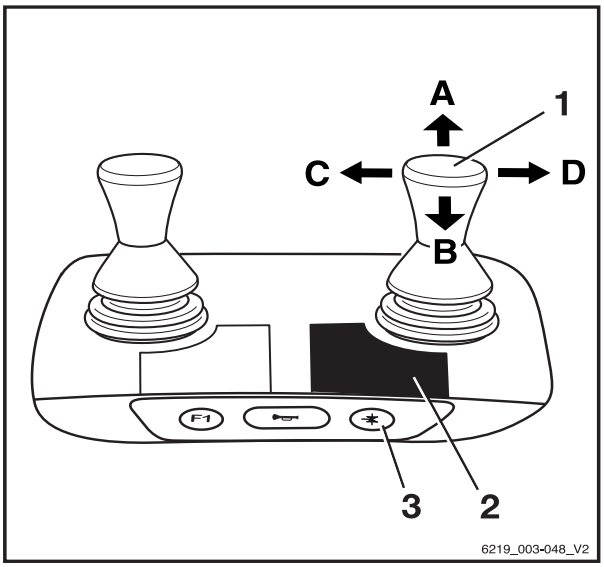

NOTE

*For technical reasons, clamping attachments **must not** be controlled via the "5th function".*

The function key for the "5th function" (3) and the cross lever (1) are used to control the "5th function".

The adhesive label bearing the pictograms for the hydraulic functions (2) is affixed at the designated point.

- If the adhesive label becomes illegible or is missing, please contact your authorised service centre.
- Observe the pictograms for the attachment functions on the adhesive label (2).

The pictograms on the "attachments" cross lever show the respective functions that are activated by this lever.

The following applies:

- Actuate the function key for the "5th function" (3).

The LED for the "5th function" lights up.

- Move the "attachments" cross lever (1) in the direction of the arrow (A), (B), (C) or (D).

The attachment moves accordingly in the directions (A), (B), (C) or (D) as shown in the pictogram.

Example using the pictograms for configuration (1):

If the "attachments" cross lever (1) is moved in the direction of the arrow (A), the fork is extended.

If the function key for the "5th function" (3) is actuated and the "attachments" cross lever (1) is moved in the direction of the arrow (A), the fork arms open.

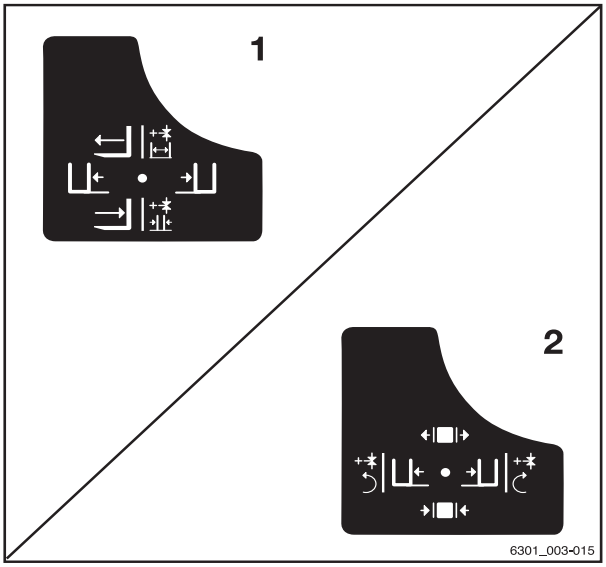

Pictogram	Attachment function
	Auxiliary hydraulics "5th function"
	Move the side shift frame or fork forwards
	Move the side shift frame or fork backwards
	Move the sideshift to the left
	Move sideshift to the right
	Adjust fork arms: open
	Adjust fork arms: close
	Rotate to the left
	Rotate to the right

NOTE

The pictograms are affixed according to the attachment fitted at the factory. If an attachment with different functions is fitted, the authorised service centre must check that the pictograms bear the correct representation and must change them if necessary.

Controlling attachments using a triple mini-lever

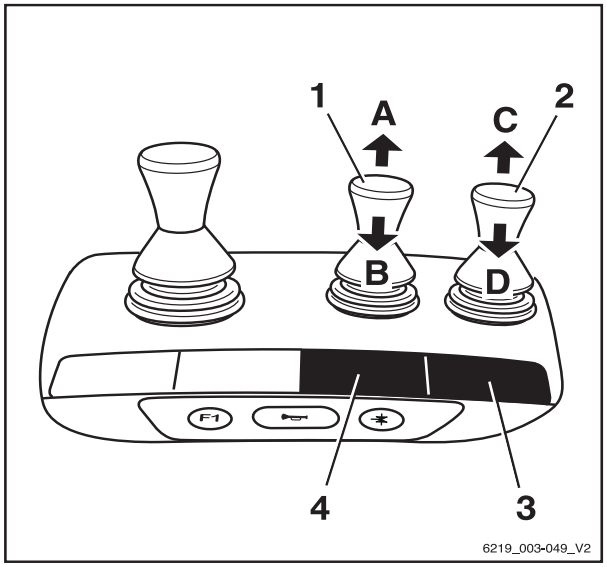

In this version, the attachments (variant) are controlled using the operating levers (1, 2). The adhesive label bearing the pictograms for the hydraulic functions (3) for the operating lever (2) and the adhesive label (4) for the operating lever (1) are affixed at the designated points.

– If the adhesive labels become illegible or are missing, please contact your authorised service centre.

– Observe the pictograms for the attachment functions on the adhesive labels (3, 4).

The pictograms on the operating levers show the respective functions that are activated by these levers.

The following applies:

– Move the operating lever (1) in the direction of the arrow (A) or (B).

The attachment moves accordingly in the directions (A) or (B) as shown in the pictogram.

– Move the operating lever (2) in the direction of the arrow (C) or (D).

The attachment moves accordingly in the directions (C) or (D) as shown in the pictogram.

Pictogram	Attachment function
	Move the side shift frame or fork forwards
	Move the side shift frame or fork backwards
	Move the sideshift to the left
	Move sideshift to the right
	Adjust fork arms: open
	Adjust fork arms: close
	Release load retainer
	Clamp load retainer
	Open clamps
	Close clamps

Picto-gram	Attachment function
	Rotate to the left
	Rotate to the right
	Tip shovel over
	Tip shovel back

NOTE

The pictograms are affixed according to the attachment fitted at the factory. If an attachment with different functions is fitted, the authorised service centre must check that the pictograms bear the correct representation and must change them if necessary.

– For actuation of the clamp locking mechanism, see the section entitled "Clamp locking mechanism (variant)".

Controlling attachments using the triple mini-lever and the 5th function

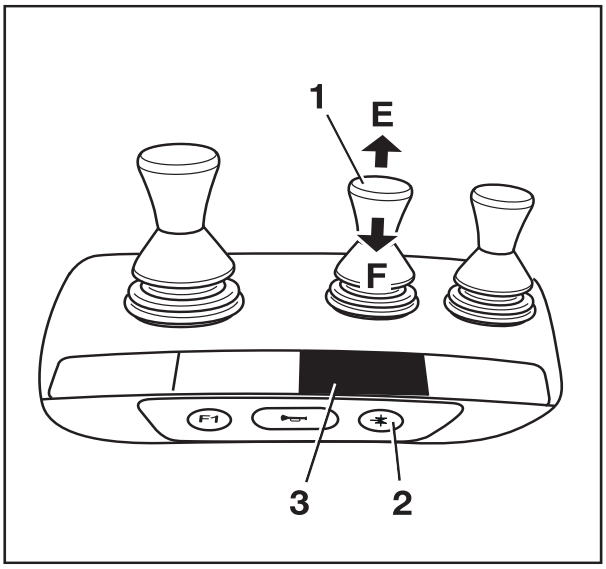

NOTE

*For technical reasons, clamping attachments **must not** be controlled via the "5th function".*

The function key for the "5th function" (2) and the operating lever (1) are used to control the "5th function".

The adhesive label bearing the pictograms for the hydraulic functions (3) is affixed at the designated point.

– If the adhesive label becomes illegible or is missing, please contact your authorised service centre.

– Observe the pictograms for the attachment functions on the adhesive label (3).

The pictograms on the operating lever show the respective functions that are activated by this lever.

The following applies:

– Actuate the function key for the "5th function" (2).

The LED for the "5th function" lights up.

– Move the operating lever (1) in the direction (E) or (F).

The attachment moves accordingly in the directions (E) or (F) as shown in the pictogram.

Example using the pictograms for configuration (1):

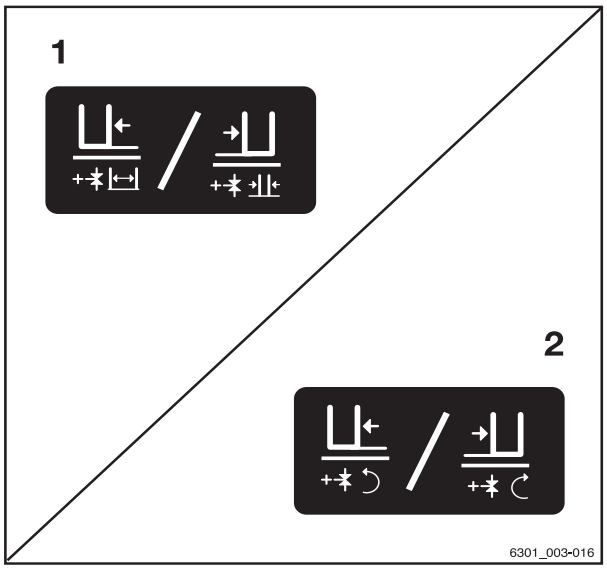

If the operating lever (1) is moved in the direction of the arrow (E), the sideshift moves to the left.

If the function key for the "5th function" (2) is actuated and the operating lever (1) is moved in the direction of the arrow (E), the fork arms open.

Pictogram	Attachment function
	Auxiliary hydraulics "5th function"
	Move the sideshift to the left
	Move sideshift to the right
	Adjust fork arms: open
	Adjust fork arms: close
	Rotate to the left
	Rotate to the right

NOTE

The pictograms are affixed according to the attachment fitted at the factory. If an attachment with different functions is fitted, the authorised service centre must check that the pictograms bear the correct representation and must change them if necessary.

Controlling attachments using a quadruple mini-lever

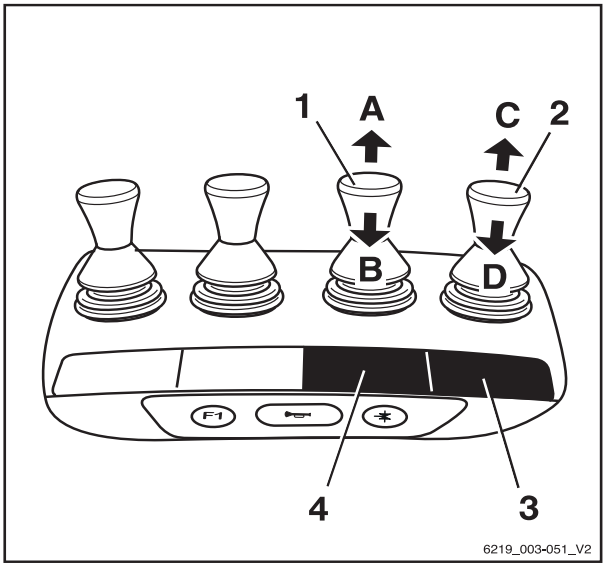

In this version, the attachments (variant) are controlled using the operating levers (1, 2). The adhesive label bearing the pictograms for the hydraulic functions (3) for the operating lever (2) and the adhesive label (4) for the operating lever (1) are affixed at the designated points.

– If the adhesive labels become illegible or are missing, please contact your authorised service centre.

– Observe the pictograms for the attachment functions on the adhesive labels (3, 4).

The pictograms on the operating levers show the respective functions that are activated by these levers.

The following applies:

– Move the operating lever (1) in the direction of the arrow (A) or (B).

The attachment moves accordingly in the directions (A) or (B) as shown in the pictogram.

– Move the operating lever (2) in the direction of the arrow (C) or (D).

The attachment moves accordingly in the directions (C) or (D) as shown in the pictogram.

Pictogram	Attachment function
	Move the side shift frame or fork forwards
	Move the side shift frame or fork backwards
	Move the sideshift to the left
	Move sideshift to the right
	Adjust fork arms: open
	Adjust fork arms: close
	Release load retainer
	Clamp load retainer
	Open clamps
	Close clamps

Picto-gram	Attachment function
	Rotate to the left
	Rotate to the right
	Tip shovel over
	Tip shovel back

NOTE

The pictograms are affixed according to the attachment fitted at the factory. If an attachment with different functions is fitted, the authorised service centre must check that the pictograms bear the correct representation and must change them if necessary.

– For actuation of the clamp locking mechanism, see the section entitled "Clamp locking mechanism (variant)".

Controlling attachments using the quadruple mini-lever and the 5th function

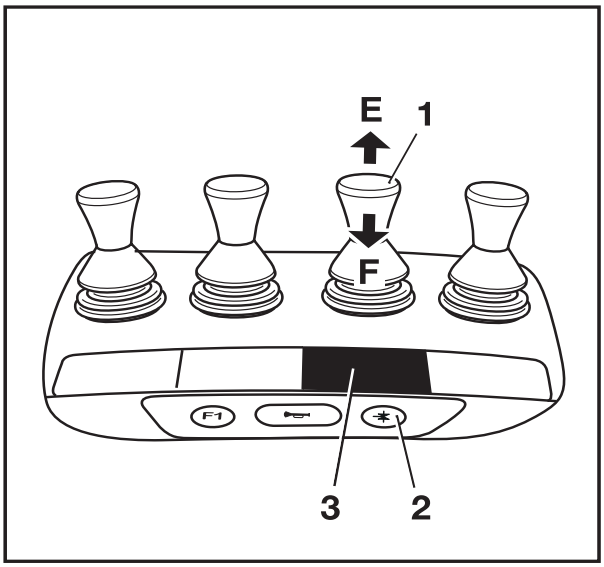

NOTE

*For technical reasons, clamping attachments **must not** be controlled via the "5th function".*

The function key for the "5th function" (2) and the operating lever (1) are used to control the "5th function".

The adhesive label bearing the pictograms for the hydraulic functions (3) is affixed at the designated point.

– If the adhesive label becomes illegible or is missing, please contact your authorised service centre.

– Observe the pictograms for the attachment functions on the adhesive label (3).

This essentially involves the following:

– Actuate the function key for the "5th function" (2).

The LED for the "5th function" lights up.

– Move the operating lever (1) in the direction (E) or (F).

The attachment moves accordingly in the directions (E) or (F) as shown in the pictogram.

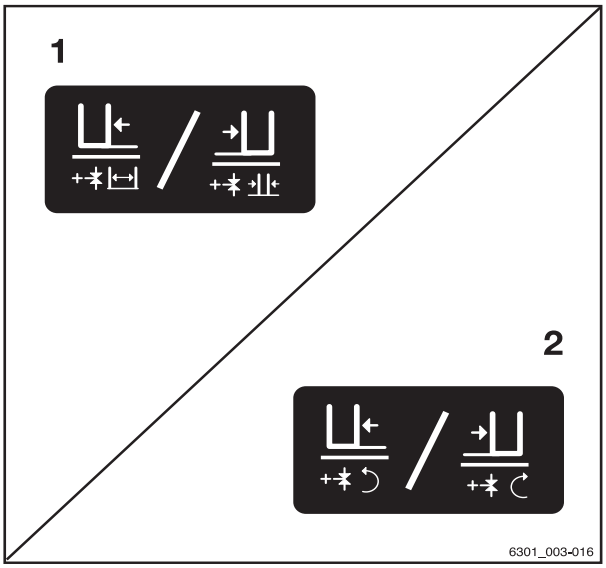

Example using the pictograms for configuration (1):

If the operating lever (1) is moved in the direction of the arrow (E), the sideshift moves to the left.

If the function key for the "5th function" (2) is actuated and the operating lever (1) is moved in the direction of the arrow (E), the fork arms open.

Pictogram	Attachment function
	Auxiliary hydraulics "5th function"
	Move the sideshift to the left
	Move sideshift to the right

Picto-gram	Attachment function
	Adjust fork arms: open
	Adjust fork arms: close
	Rotate to the left
	Rotate to the right

NOTE

The pictograms are affixed according to the attachment fitted at the factory. If an attachment with different functions is fitted, the authorised service centre must check that the pictograms bear the correct representation and must change them if necessary.

Controlling attachments using the Fingertip

▷

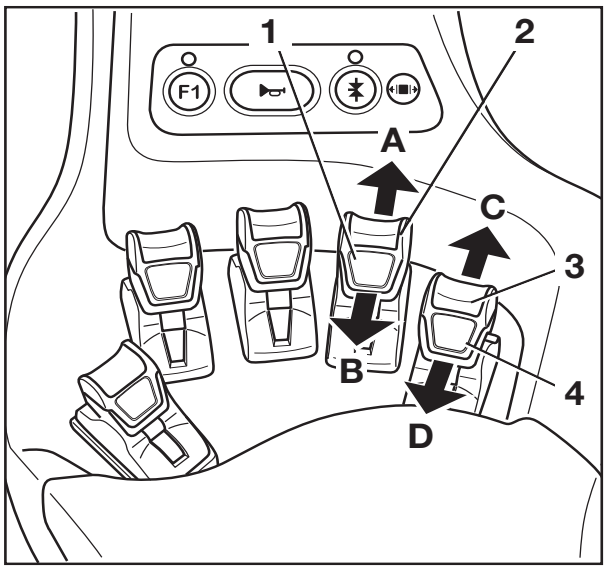

In this version, the attachments (variant) are controlled using the operating levers (1) and (2). The adhesive label bearing the pictograms for the hydraulic functions (3) for the operating lever (2) and the adhesive label (4) for the operating lever (1) are affixed at the designated points.

– If the adhesive labels become illegible or are missing, please contact your authorised service centre.

– Observe the pictograms for the attachment functions on the adhesive labels (3, 4).

The pictograms on the operating levers show the respective functions that are activated by these levers.

The following applies:

– Move the operating lever (1) in the direction of the arrow (A) or (B).

The attachment moves accordingly in the directions (A) or (B) as shown in the pictogram.

– Move the operating lever (2) in the direction of the arrow (C) or (D).

The attachment moves accordingly in the directions (C) or (D) as shown in the pictogram.

Picto-gram	Attachment function
	Move the side shift frame or fork forwards
	Move the side shift frame or fork backwards
	Move the sideshift to the left
	Move sideshift to the right
	Adjust fork arms: open
	Adjust fork arms: close
	Release load retainer
	Clamp load retainer
	Open clamps
	Close clamps
	Rotate to the left
	Rotate to the right
	Tip shovel over
	Tip shovel back

NOTE

The pictograms are affixed according to the attachment fitted at the factory. If an attachment with different functions is fitted, the authorised service centre must check that the pictograms bear the correct representation and must change them if necessary.

– For actuation of the clamp locking mechanism, see the section entitled "Clamp locking mechanism (variant)".

Controlling attachments with Finger-tip and the 5th function ▷

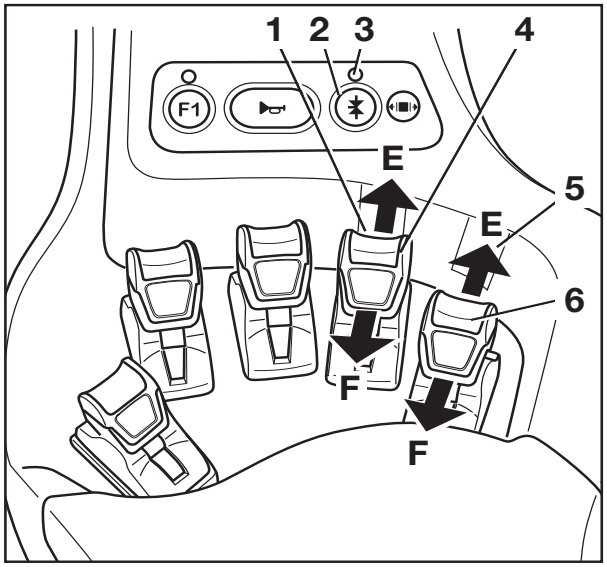

NOTE

*For technical reasons, clamping attachments **must not** be controlled via the 5th function.*

The function key for the "5th function" (2) and the operating levers (1, 6) are used to control the "5th function".

The pictograms (1, 5) behind the operating levers show the functions that are activated by the respective levers.

– If the adhesive labels become illegible or are missing, please contact your authorised service centre.

The following applies:

– Actuate the function key for the "5th function" (2).

The LED for the "5th function" (3) lights up.

– Move the operating lever (4) or (6) in the direction of the arrow (E) or (F).

The attachment moves accordingly in the directions (E) or (F) as shown in the pictogram.

NOTE

The place where the adhesive label bearing the pictograms (1) or (5) is affixed shows which operating lever is intended to operate the "5th function". The pictograms show the functions that are activated by switching with the function key (2).

Picto-gram	Attachment function
	Auxiliary hydraulics "5th function"
	Move the sideshift to the left
	Move sideshift to the right
	Adjust fork arms: open
	Adjust fork arms: close
	Rotate to the left
	Rotate to the right

NOTE

The pictograms are affixed according to the attachment fitted at the factory. If an attachment with different functions is fitted, the authorised service centre must check that the pictograms bear the correct representation and must change them if necessary.

Controlling attachments using the Joystick 4Plus

In this version, the attachments (variant) are controlled via the Joystick 4Plus (1) and the slider (4). The adhesive label bearing the pictograms for the hydraulic functions (2) for the Joystick 4Plus (1) and the adhesive label (3) for the slider (4) are affixed at the designated points.

– If the adhesive labels become illegible or are not present, please contact your authorised service centre.

– Observe the pictograms for the attachment functions on the adhesive labels (2, 3).

The pictograms on the adhesive labels regarding operation of the Joystick 4Plus show the respective functions that are activated by the individual operating devices of the Joystick 4Plus.

The following applies:

– Move the Joystick 4Plus (1) in the direction of the arrow (A) or (B).

The attachment moves accordingly in the directions (A) or (B) as shown in the pictogram.

– Move the slider (4) in the direction of the arrow (C) or (D).

The attachment moves accordingly in the directions (C) or (D) as shown in the pictogram.

Pictogram	Attachment function
	Move side shift frame or fork forwards
	Move side shift frame or fork backwards
	Move sideshift to the left
	Move sideshift to the right
	Adjust fork arms: open
	Adjust fork arms: close
	Release load retainer
	Clamp load retainer
	Open clamps

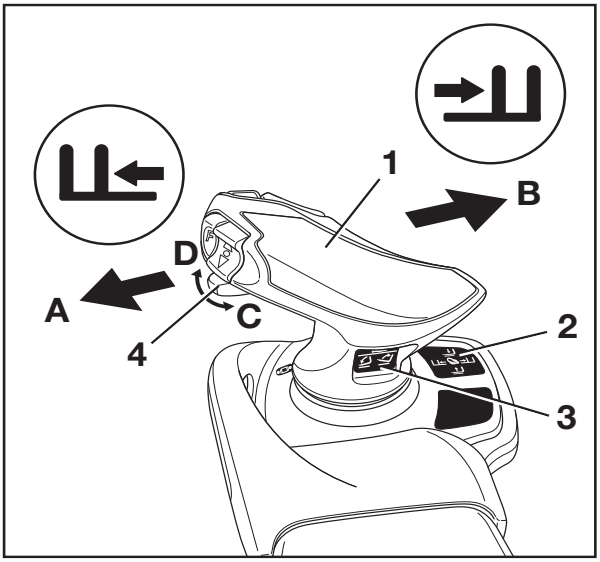

Picto-gram	Attachment function
	Close clamps
	Rotate to the left
	Rotate to the right
	Tip shovel over
	Tip shovel back

NOTE

The pictograms are affixed according to the attachment fitted at the factory. If an attachment with different functions is fitted, the authorised service centre must check that the pictograms bear the correct representation and must change them if necessary.

– For actuation of the clamp locking mechanism, see the section entitled "Clamp locking mechanism (variant)".

Controlling attachments with Joystick 4Plus and the 5th function

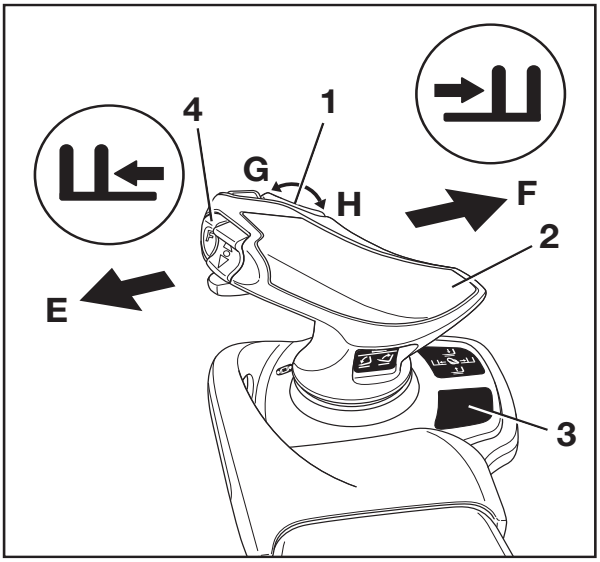

NOTE

For technical reasons, clamping attachments ***must not*** *be controlled via the 5th function.*

Use shift key "F" (4) and the Joystick 4Plus (2) and the horizontal rocker button (1) to control the "5th function".

The adhesive label bearing the pictograms for the hydraulic functions (3) for the Joystick 4Plus (2) and for the rocker button (1) is affixed at the designated point.

– If the adhesive label becomes illegible or is not present, please contact your authorised service centre.

The pictograms on the adhesive label regarding operation of the Joystick 4Plus show the respective functions that are activated by the individual operating devices of the Joystick 4Plus.

– Note the following attachment functions and pictograms.

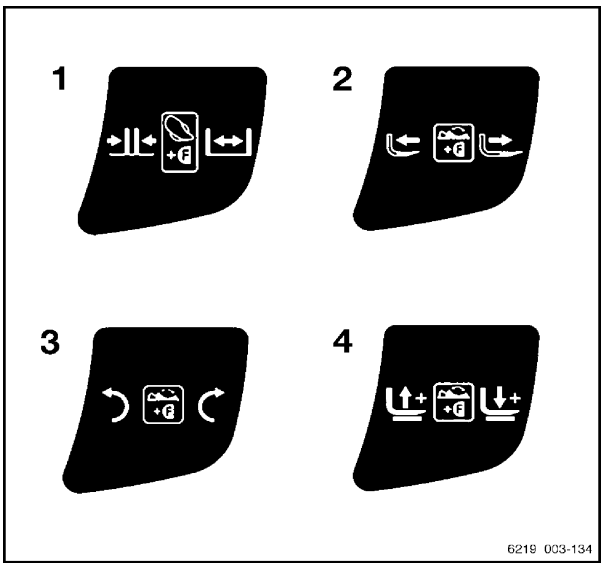

	Operating device	Function of the attachment
1	Shift key "F" and Joystick 4Plus	Adjust fork arms: close/open
2	Shift key "F" and rocker button	Adjust fork: backwards/forwards
3	Shift key "F" and rocker button	Swivel lift mast or fork: left/right
4	Shift key "F" and rocker button	Additional fork carriage: lift/lower

The following applies:

– Press and hold shift key "F" (4).

– Move the Joystick 4Plus (2) in the direction (E) or (F).

The attachment moves accordingly in the directions (E) or (F) as shown in the pictogram.

– Push the rocker button (1) in the direction (G) or (H).

The attachment moves accordingly in the directions (G) or (H) as shown in the pictogram.

– Release shift key "F" (4).

NOTE

The pictograms are affixed according to the attachment fitted at the factory. If an attachment with different functions is fitted, the authorised service centre must check that the pictograms bear the correct representation and must change them if necessary.

Clamp locking mechanism (variant)

This truck can be fitted with a clamp locking mechanism for clamping attachments. This prevents the clamp from opening unintentionally if the operating function is inadvertently triggered.

DANGER

If the correct function of the clamp locking mechanism is not guaranteed, there is a risk to life from a falling load!

If other attachments are used on this truck in addition to the clamp, make sure that the function of the clamp locking mechanism is reassigned to the corresponding operating device every time the clamp is refitted. See the section entitled "Fitting attachments".

– Make sure that the additional clamp locking mechanism function is available.

NOTE

*For technical reasons, clamping attachments **must not** be controlled via the "5th function".*

Multi-lever

NOTE

For technical reasons, no clamp locking mechanism is available for the multi-lever operating device.

Double mini-lever

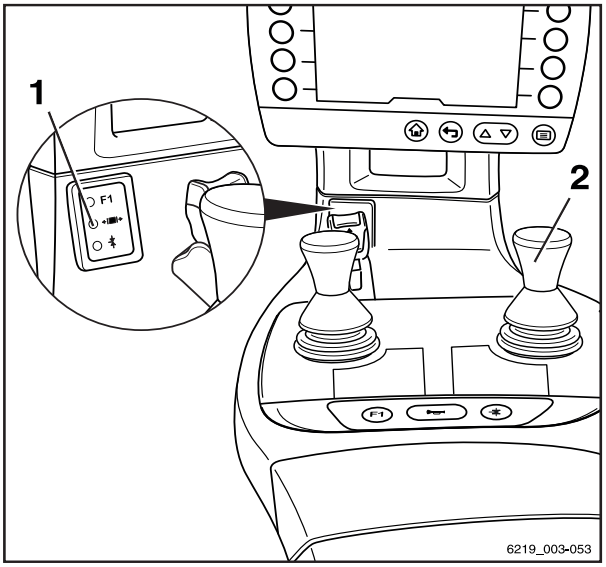

– To release the clamp locking mechanism, push the operating lever (2) forwards.

The clamp locking mechanism is released. The LED for the "clamp release" (1) lights up and remains lit while the clamp locking mechanism is released.

NOTE

The hydraulic function for opening the clamp is available for one second after the clamp locking mechanism is released. After one second, the clamp locking mechanism is automatically reactivated.

– To open the clamp, push the operating lever (2) forwards again.

It is not necessary to release the clamp locking mechanism in order to close the clamp.

– To close the clamp, pull the operating lever (2) backwards.

Triple mini-lever

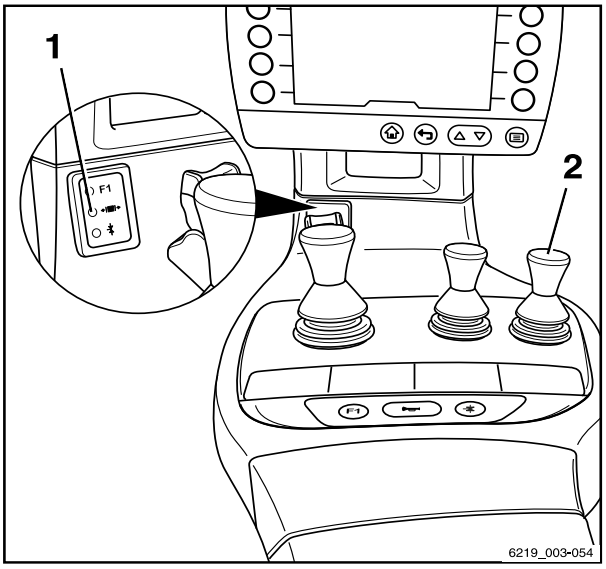

– To release the clamp locking mechanism, push the operating lever (2) forwards.

The clamp locking mechanism is released. The LED for the "clamp release" (1) lights up and remains lit while the clamp locking mechanism is released.

NOTE

The hydraulic function for opening the clamp is available for one second after the clamp locking mechanism is released. After one second, the clamp locking mechanism is automatically reactivated.

– To open the clamp, push the operating lever (2) forwards again.

It is not necessary to release the clamp locking mechanism in order to close the clamp.

– To close the clamp, pull the operating lever (2) backwards.

Quadruple mini-lever

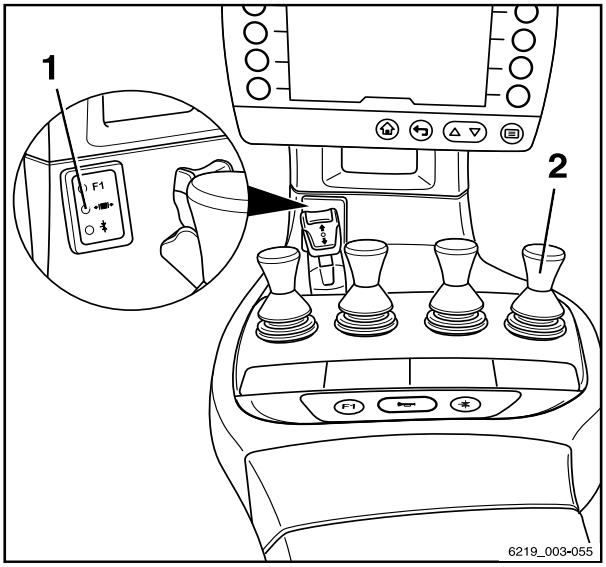

– To release the clamp locking mechanism, push the operating lever (2) forwards.

The clamp locking mechanism is released. The LED for the "clamp release" (1) lights up and remains lit while the clamp locking mechanism is released.

NOTE

The hydraulic function for opening the clamp is available for one second after the clamp locking mechanism is released. After one second, the clamp locking mechanism is automatically reactivated.

– To open the clamp, push the operating lever (2) forwards again.

It is not necessary to release the clamp locking mechanism in order to close the clamp.

– To close the clamp, pull the operating lever (2) backwards.

Fingertip

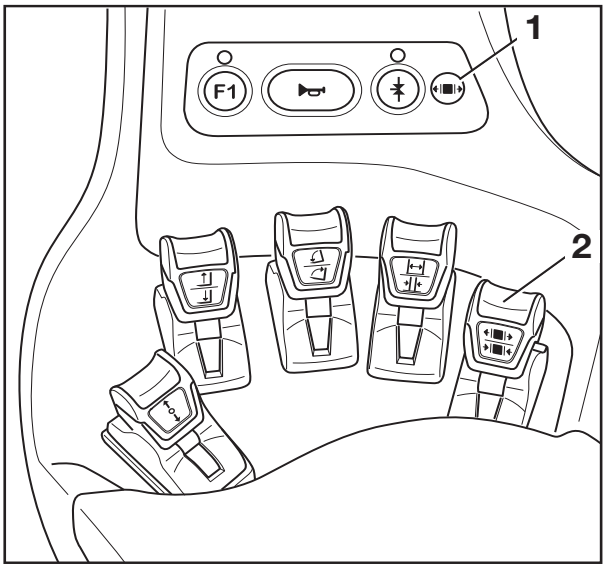

– To release the clamp locking mechanism, push the operating lever (2) forwards.

The clamp locking mechanism is released. The LED for the "clamp release" (1) lights up and remains lit while the clamp locking mechanism is released.

NOTE

The hydraulic function for opening the clamp is available for one second after the clamp locking mechanism is released. After one second, the clamp locking mechanism is automatically reactivated.

– To open the clamp, push the operating lever (2) forwards again.

It is not necessary to release the clamp locking mechanism in order to close the clamp.

– To close the clamp, pull the operating lever (2) backwards.

Joystick 4Plus

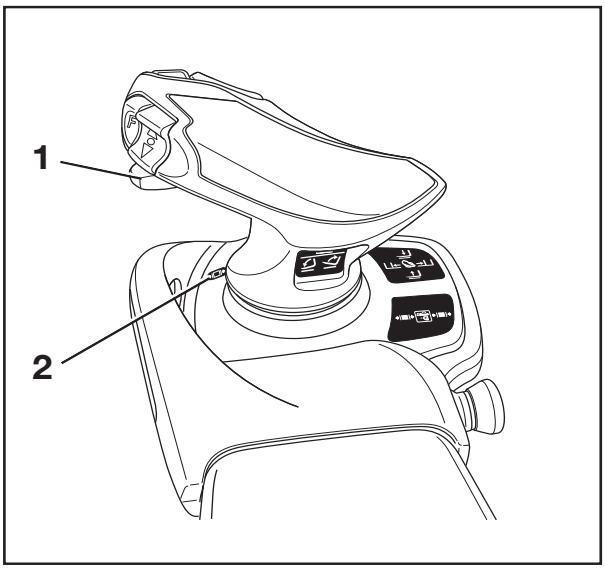

– To release the clamp locking mechanism, push the slider (1) to the left.

The clamp locking mechanism is released. The LED for the "clamp release" (2) lights up and remains lit while the clamp locking mechanism is released.

– To open the clamp, push the slider (1) to the left again.

NOTE

The hydraulic function for opening the clamp is available for one second after the clamp locking mechanism is released. After one second, the clamp locking mechanism is automatically reactivated.

It is not necessary to release the clamp locking mechanism in order to close the clamp.

– To close the clamp, push the slider (1) to the right again.

Picking up a load using attachments

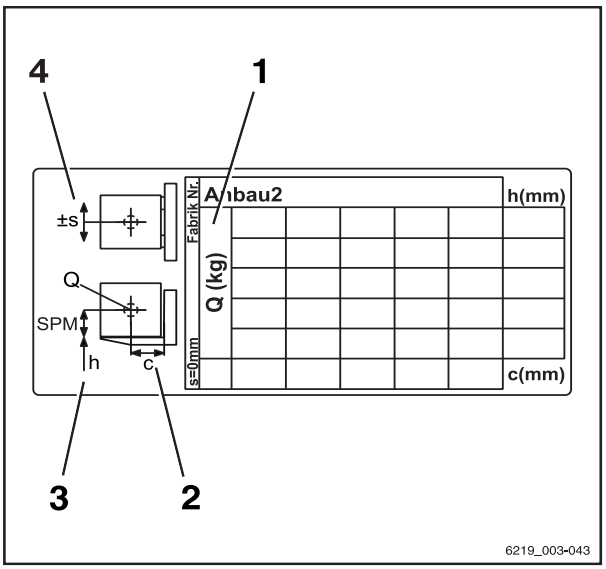

WARNING

Risk of accident!

Attachments must only be deployed for their intended use as described in the relevant operating instructions.

Drivers must be taught how to operate the attachments.

WARNING

Risk of accident!

Loads may only be picked up and transported with attachments if the loads are securely grasped and attached. Where necessary, loads must also be secured against slipping, rolling, falling over, swinging or tipping over. Note that any change to the position of the load centre of gravity will affect the stability of the truck.

Check the capacity rating plates for the attachments or combination of attachments.

– The rating plates show the permissible values for:

1 Load capacity Q (kg)
2 Load distance C (mm)
3 Lift height h (mm)
4 Permissible sideshift s (mm)

Auxiliary equipment

FleetManager (variant)

FleetManager is an equipment variant and can be fitted to the truck in different versions. The description and operation information can be found in the separate operating instructions for the corresponding FleetManager versions.

Shock recognition (variant)

The shock recognition is an equipment variant of the FleetManager (variant) in which an acceleration sensor is installed in the truck. The acceleration sensor records data arising from rapid accelerations or decelerations of the truck, e.g. in the event of an accident. This data can be electronically read out and evaluated.

– If you have any questions, please contact your authorised service centre.

Driver restraint systems (variants)

Different driver restraint systems are available as variants for this truck. The description and operation for these systems can be found in the separate "Driver restraint systems" operating instructions.

Actuating the windscreen wipers and windscreen washers (variant)

Repeatedly pressing the respective button switches between the operating stages in the sequence shown below.

Button actuation	Operating stage
	Off
1 Times	On
2 Times	Intermittent mode
3rd Times	Off
Hold (possible in all operating stages)	Washer

Front windscreen wiper and washer

– To activate the "On" operating stage, press the corresponding Softkey for the symbol (1) on the display-operating unit.

The "On" operating stage is activated. The symbol (3) appears

– To activate the "Intermittent mode" operating stage, press the Softkey again.

The symbol (2) is highlighted with an orange point.

– To activate the "Washer" operating stage, press and hold the Softkey.

The "Washer" operating stage is activated. The symbol (4) is displayed for as long as the Softkey is pressed.

– Once the window is clean, release the Softkey.

The previous operating stage is reactivated.

– To deactivate the operating stage, press the Softkey again.

▷

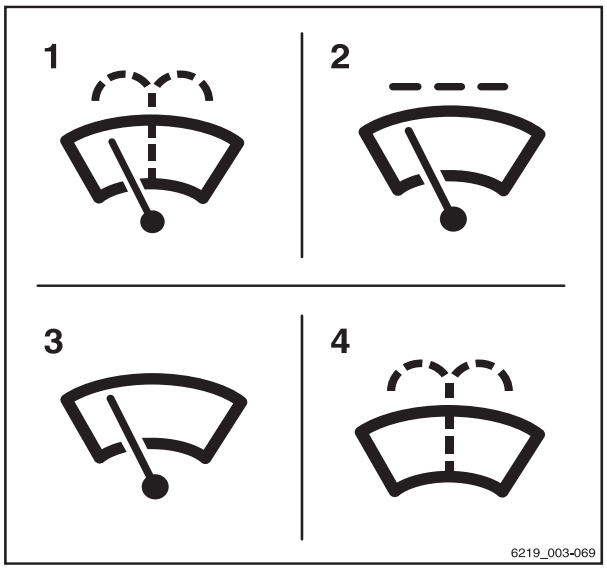

1 Front windscreen wiper and washer symbol
2 Intermittent mode
3 On
4 Washer

Rear window wiper and washer

– To activate the "On" operating stage, press the corresponding Softkey for the symbol (5) on the display-operating unit.

The "On" operating stage is activated. The symbol (7) appears

– To activate the "Intermittent mode" operating stage, press the Softkey again.

The symbol (6) is highlighted with an orange point.

– To activate the "Washer" operating stage, press and hold the Softkey.

The "Washer" operating stage is activated. The symbol (8) is displayed for as long as the Softkey is pressed.

– Once the window is clean, release the Softkey.

The previous operating stage is reactivated.

– To deactivate the operating stage, press the Softkey again.

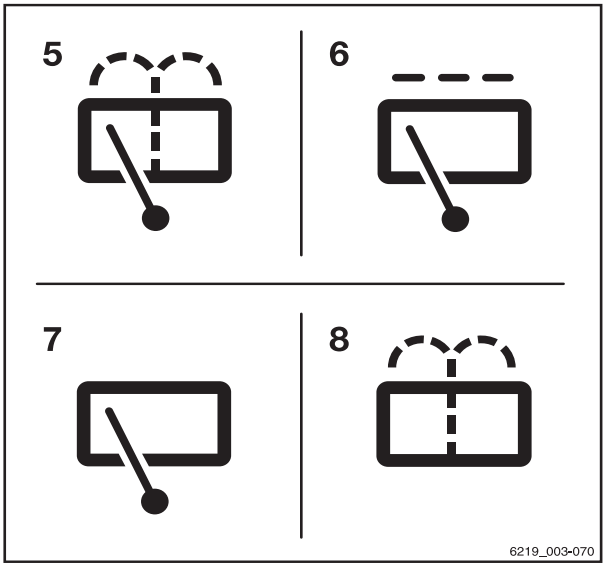

5 Rear window wiper and washer symbol
6 Intermittent mode
7 On
8 Washer

Roof panel wiper and washer

– To activate the "On" operating stage, press the corresponding Softkey for the symbol (9).

The "On" operating stage is activated. The symbol (10) appears

– To activate the "Washer" operating stage, press and hold the Softkey.

The "Washer" operating stage is activated. The symbol (11) is displayed for as long as the Softkey is pressed.

– Once the window is clean, release the Softkey.

The previous operating stage is reactivated.

– To deactivate the operating stage, press the Softkey again.

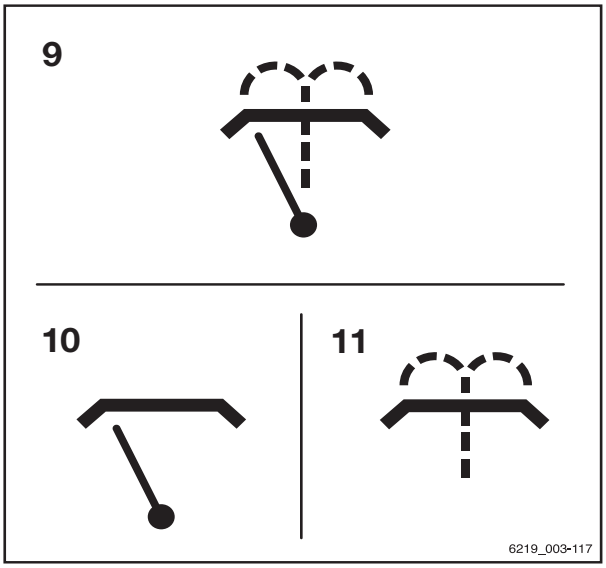

9 Roof panel wiper and washer symbol
10 On
11 Washer

Filling the washer system

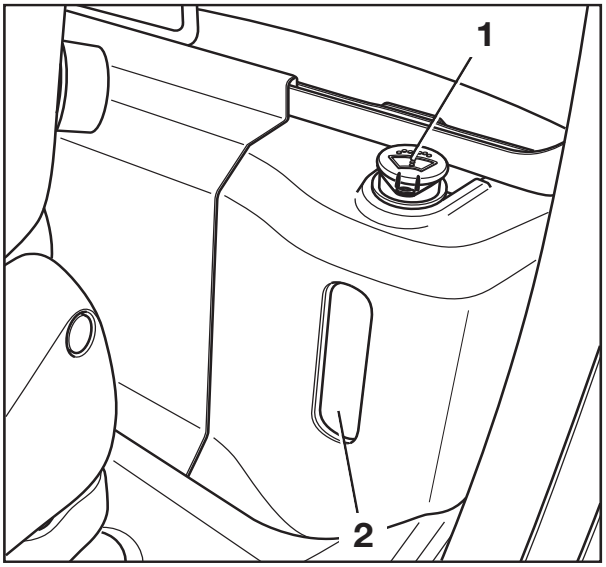

- Open the filler cap (1) of the washer system.
- Fill the washer reservoir (2) with washer fluid as described in the "Maintenance data table".

⚠ CAUTION

Damage due to the effects of frost!

When water freezes, it expands. If the washer system is not filled with fluid that is suitable for use in winter, ice can form in the washer system and cause damage.

- If there is a risk of frost, use fluid that is suitable for winter use.

- Close the filler cap.
- Operate the screen washer system until washer fluid is discharged from the spray nozzles.

Operating the rear window heating

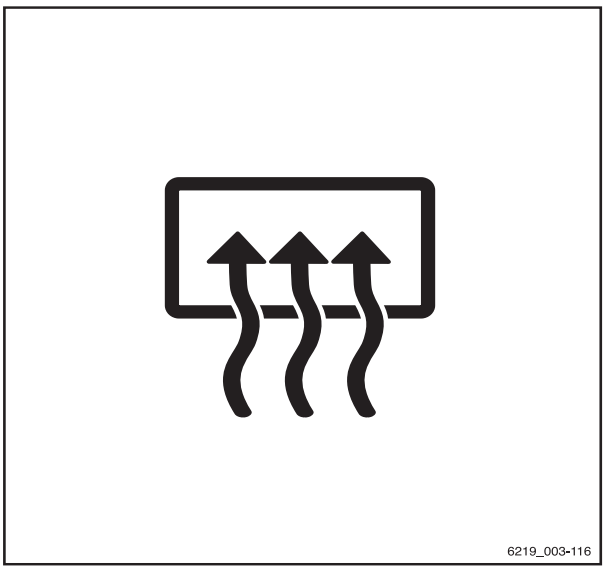

- To switch on the rear window heating, push the associated Softkey on the display-operating unit.

The rear window heating is switched on.

- To switch off the rear window heating, push the Softkey again.

The rear window heating is switched off.

NOTE

The screen heating will switch off automatically after approx. 10 minutes.

Ceiling sensor (variant)

Description

The ceiling sensor (1) on the overhead guard is an assistance system that automatically reduces the driving speed of the truck within halls. However, this assistance system does not release the driver from the responsibility of observing the speed limits on company premises.

Depending on the system setting, the ceiling sensor can detect overhead structures above the truck at a height of 2 m to 24 m above the sensor.

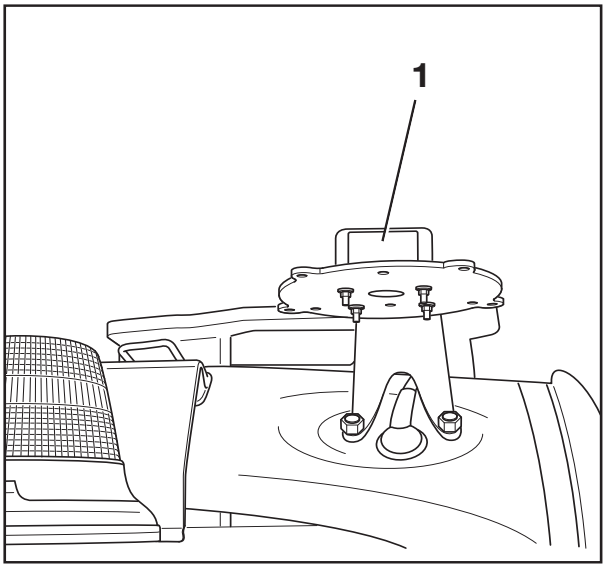

Operating the ceiling sensor system

The drivers are to be instructed on the use of the ceiling sensor system by the operating company.

When the driver enters a hall for the first time after starting work, he must be certain that the ceiling sensor system is functioning correctly. Despite the ceiling sensor system being installed, the driver must also check the speed indicator on the display-operating unit on a regular basis to ensure that he does not exceed the maximum speed permitted for the environment.

- **Entering a hall**
  The ceiling detector system automatically detects whether the truck enters a hall. The system then automatically slows the truck to the maximum speed that is set for the hall.
- **Leaving a hall**
  If the truck leaves the hall again, the ceiling detector system enables the maximum speed set for areas outside the hall. Due to the range of the sensor, this may not happen until the truck is a few metres away from the hall exit. Before the truck is able to accelerate to the maximum speed permitted for outdoor areas, the speed limitation must still be unlocked. To do this, release the

accelerator briefly and then operate the accelerator again.

- **Switching on the truck in a hall**

  If the truck is switched on inside a hall, the ceiling detector system detects the hall ceiling and reduces the driving speed to the maximum speed that is set for halls.

Possible limitations for object recognition

- If the truck moves under larger overhead structures outdoors, e.g. a pedestrian bridge, the ceiling sensor system may interpret this overhead structure to be a hall ceiling and reduce the maximum speed.
- In rare cases, it may occur that the ceiling sensor system does not recognize a ceiling and does not then reduce the speed. This can happen if the signals from the ceiling sensor are insufficiently reflected due to the ceiling geometry; for example, if there are large window areas at a 45° angle.

In these cases, the sensitivity and the range of the ceiling sensor system must be adjusted. For more information, refer to the next chapter.

Changing the sensor settings

The ceiling sensor system is supplied by STILL with the following factory settings:

Sensitivity: **High**

Ceiling height: **24 m**

– Pull out the connecting cable from the sensor.

– On the underside of the assembly baseplate on the overhead guard, loosen the four nuts (1) on the sensor. ▷

– Carefully remove the sensor.

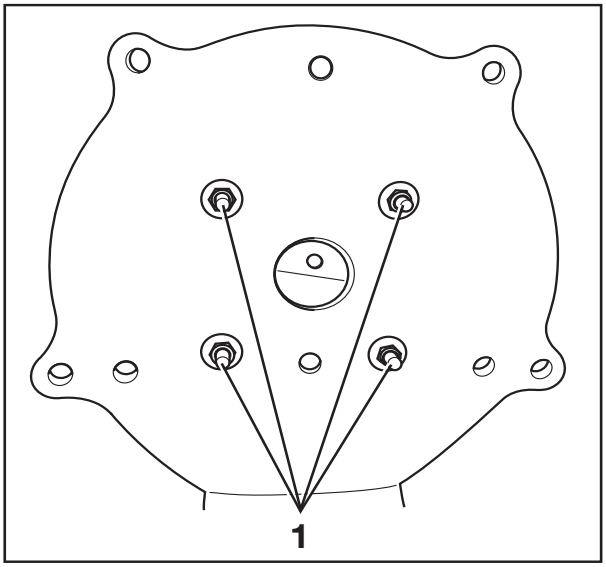

– Using the supplied key (2), open the sensor housing to gain access to the DIP switches. ▷

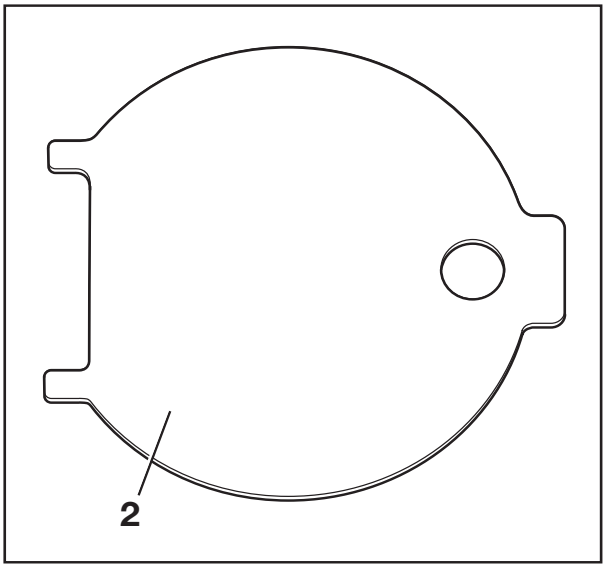

– Using the DIP switches "1" to "5" (3), adjust the range and the sensitivity of the sensor. The DIP switches can be adjusted using a small screwdriver. ▷

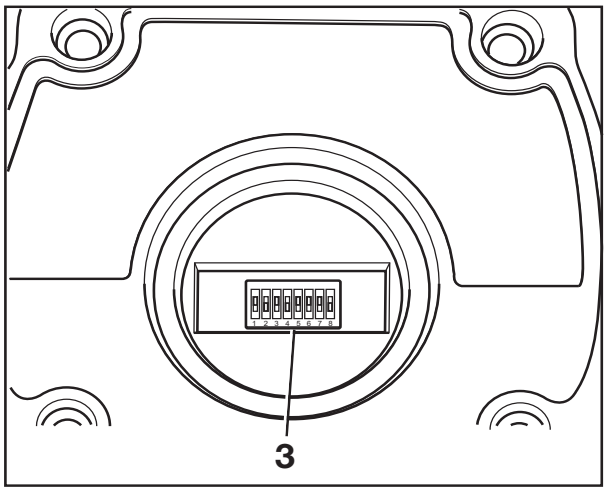

⚠ CAUTION

The settings for DIP switches "6" to "8" are the factory settings of the manufacturer.

They must **not** be changed!

Factory settings of the manufacturer - do not change

DIP switch		
6	7	8
1	1	0

The possible settings for DIP switches "1" to "5" are shown in the following tables:

DIP switch			
1	2	3	Range
0	0	0	2 m
0	0	1	3 m
0	1	0	4 m
0	1	1	6 m
1	0	0	8 m
1	0	1	12 m
1	1	0	16 m
1	1	1	24 m

4	5	Sensitivity
0	0	Very high
0	1	High
1	0	Medium
1	1	Low

The sensor has different beam angles depending on the combination of range and

sensitivity that has been set. See the following table:

Sensitivity	Range	Beam angle
Low (1)	2 m	22.5°
	4 m	22.5°
	8 m	20°
	16 m	15°
	24 m	5°
Medium (2)	2 m	35°
	4 m	30°
	8 m	25°
	16 m	22.5°
	24 m	10°

Sensitivity	Range	Beam angle
High (3)	2 m	42°
	4 m	33°
	8 m	22.5°
	16 m	20°
	24 m	15°
Very high (4)	2 m	45°
	4 m	43°
	8 m	30°
	16 m	22.5°
	24 m	18°

Representation of the beam angle depending on the sensitivity of the sensor that has been set, from (1)"low" to (4)"very high". ▷

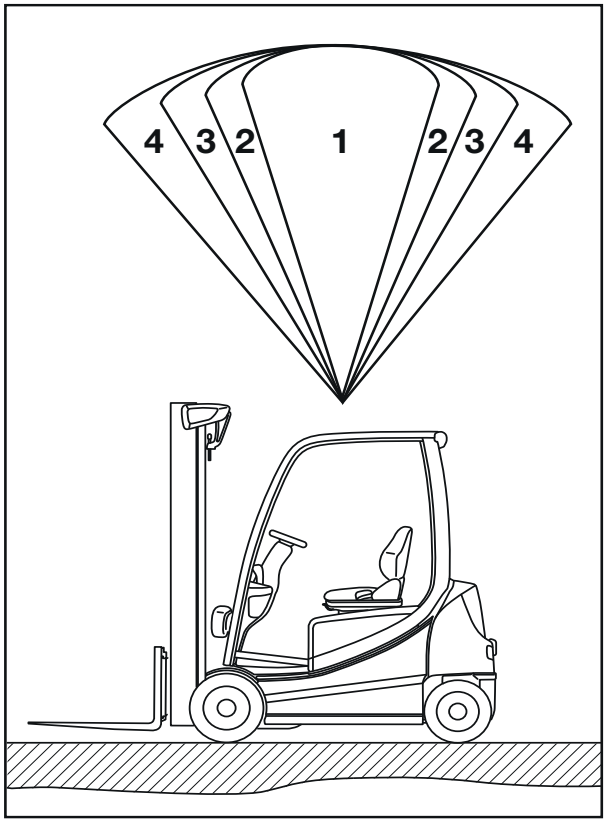

Additional labelling

Adhesive label next to the display-operating unit ▷

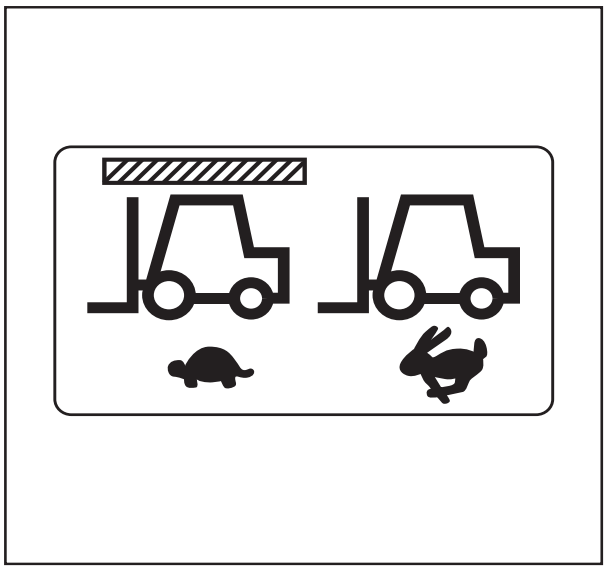

Cab

Opening and closing the cab door

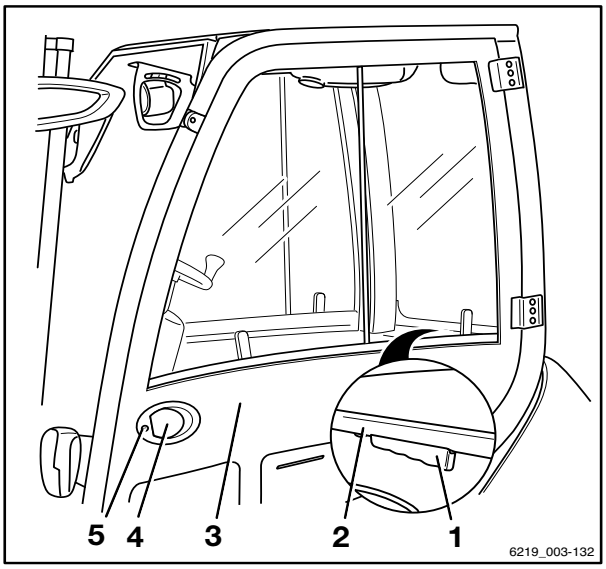

⚠ CAUTION

Risk of component damage.

If the cab door opens while driving, there is risk of damage from a collision.

– The cab door must be latched securely in the engaged position.

The truck has a cab door sensor that is used to monitor the closing of the cab door.

If the seat belt is not fastened and the cab door is not closed, the driving speed is limited to 4 km/h. The message `Close cab door or seat belt` appears in the display.

If the cab door is opened while the truck is in motion and the seat belt is fastened, the truck decelerates and is restricted to a driving speed of 4 km/h. The message `Close cab door` appears in the display.

If the seat belt is released with the cab door closed, no message appears.

Opening the cab door from the outside:

– Insert the key in the door lock (5), unlock the door and remove the key.

– Pull the handle (4). Unlock the door lock.

– Open the cab door (3) by pulling it outwards.

Opening the cab door from the inside:

– Take hold of the handle (2) and the latch (1).

– Push in the latch. Push the cab door outwards.

Closing the cab door from the outside:

– Take hold of the door by the door handle (4). Close the cab door by pushing.

Closing the cab door from the inside:

– Take hold of the handle (2).

– Pull the cab door inwards and close it.

Opening and closing the side window ▷

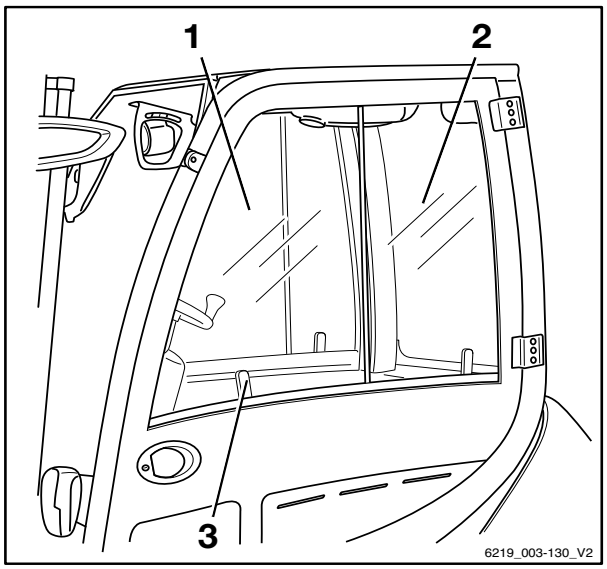

⚠ WARNING

There is a risk of crushing between the window frame and side window due to the side windows slipping inadvertently during travel.

– Make sure that the handle engages securely in the corresponding stop slot.

Opening the front side window:

– Squeeze the handle (3). Slide the front side window (1) backwards.

Opening the rear side window:

The rear side window (2) can be opened in the same way as the front side window.

Closing the front side window:

– Slide the front side window (1) forwards using the handle (3) until it snaps into place.

Closing the rear side window:

The rear side window (2) can be closed in the same way as the front side window.

Turning the interior lighting on or off (variant) ▷

– To turn the interior lighting on or off, press the push button switch (1) in the middle of the interior lighting.

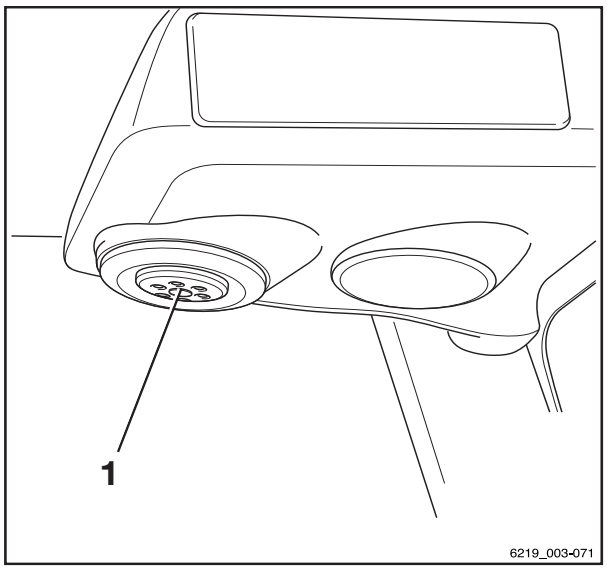

Radio (variant)

The radio and the loudspeakers are an equipment variant. If the truck is equipped with a radio and loudspeakers, they are integrated into the roof lining.

The description and operation can be found in the separate operating instructions for the radio.

⚠ WARNING

The driver's attention is adversely affected by operating the radio or listening to it at excessive volumes while driving or handling loads. Risk of accident!

- Do not operate the radio when driving or when handling loads.
- Adjust the radio volume so that you can still hear warning signals.

Heating system (variant)

⚠ DANGER

There is a risk of poisoning if heavily polluted surrounding air is aspirated into the closed cab!

- Do not operate the heater in the vicinity of storage areas or similar areas, in which fuel vapours or fine dust (e.g. coal, wood or grain dust) can build up.

⚠ DANGER

The heat can cause gases to expand considerably or to ignite. There is a risk of explosion!

- Do not expose spray cans or gas cartridges to the flow of hot air.

DANGER

The heating system can overheat if the hot air cannot escape from it. Risk of fire!

The heating system may only be switched on if the blower is running and the heating system is not covered by objects (such as a jacket or cover).

– Always switch the blower on first.
– Do not switch the heating system on until the blower is switched on.
– Move any objects away from the heating system or air distributors.

DANGER

The heating system housing can become very hot during heating operation. There is a risk of burns if it is touched!

– Do not touch the heating system housing during operation.
– Only touch the switches provided.

Operating devices of the heating system ▷

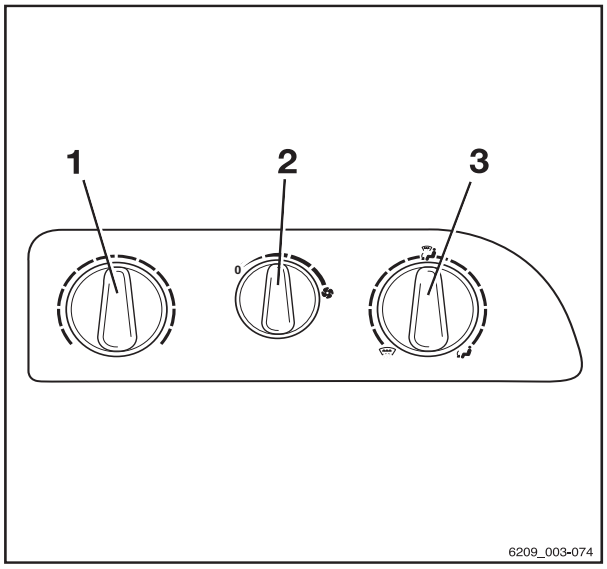

The operating devices of the heating system include:

1 Heating level control knob
2 Fan control knob
3 Air vent control knob

Switching on the blower and heating system

– Turn the fan control knob (2) to the desired blower position.

The blower runs at the speed level selected via the fan control knob (2).

– Turn the heating level control knob (1) to the desired heating level.

The heater warms the air to the heating level selected via the heating level control knob (1)

– Turn the air vent control knob (3) to the desired position.

Selecting blower settings

– To select a lower fan output, turn the fan control knob (2) anticlockwise.

– To select a high blower output, turn the fan control knob (2) clockwise.

Setting heating levels

– To set a lower heater power, turn the heating level control knob (1) anticlockwise.

– To set a higher heater power, turn the heating level control knob (1) clockwise.

Setting the air vent control knob

– To direct the air flow to the footwell, turn the air vent control knob (3) in an anticlockwise direction to the position.

– To direct the air flow to the windscreen, turn the air vent control knob (3) in a clockwise direction to the position.

The centre position directs the air flow to the footwell and the windscreen.

Switching off the heating system and blower

– Turn the heating level control knob (1) in an anticlockwise direction until it reaches the stop.

The heating system is shut off.

– Turn the fan control knob (2) in an anticlockwise direction until it reaches the stop.

The blower is shut off.

Adjusting the air distributors

The air distributors for the driver are always supplied with air. It is not necessary to adjust the heating system using the operating devices.

– To open the air distributor, push the indentation (1) on the disc.

The discs open.

– Grasp the discs to align the air flow:

The discs can be adjusted to the desired angle. The air distributor can be rotated.

– Press down again to close the discs.

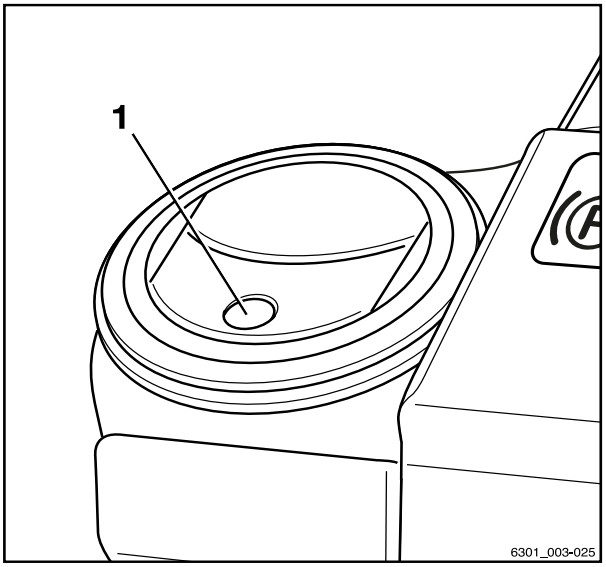

Changing fuses

DANGER

Using the wrong fuses can result in short circuits. Risk of fire!

– Use only fuses with the prescribed nominal current.

Air conditioning (variant)

The air conditioning dries the air in the cab to prevent the glass panes misting up. The temperature of the air that is blown out is based on the heating level that has been set. The defrost function can be used to de-ice the windscreen quickly.

The operating devices of the air conditioning include:

1 Heating level control knob
2 Fan control knob
3 Air vent control knob
4 Defrost switch
5 On/off switch

– To adjust the air distributors and to control the blower positions, the heat settings and the air vent control knob, see the section entitled "Heating system (variant)".

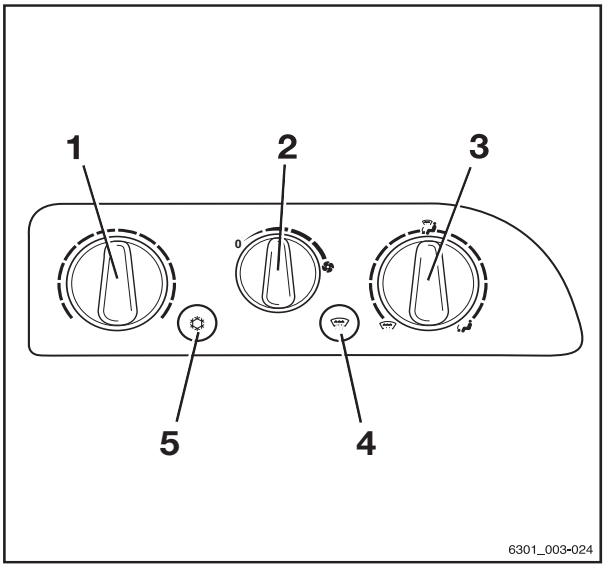

Switching the air conditioning on and off

– Push the on/off switch (5).

The LED on the switch lights up green. The air conditioning is switched on.

– Press the on/off switch (5) again.

The LED on the switch goes out. The air conditioning is switched off.

Defrost function

The defrost function can be used to de-ice and dehumidify the windscreen quickly. To do this, turn the air vent control knob (3) clockwise to the position. Open the air distributors and direct them onto the windscreen.

– Switch on the air conditioning.

– Push the defrost switch (4).

The LED on the switch lights up green. The air conditioning operates at full power. The highest heating level is selected. This feature operates for a limited period only. To save energy, it switches itself off automatically.

– Press the defrost switch (4) again.

The defrost function is switched off.

Clipboard (variant)

The clipboard (1) with reading lamp (2) is an equipment variant.

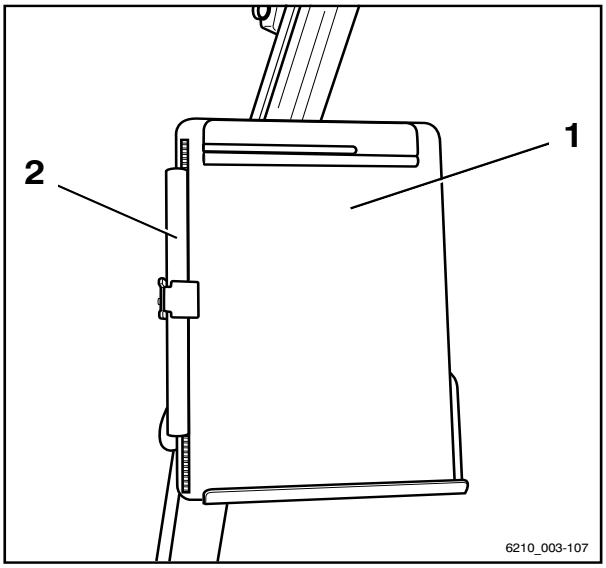

Sun visor and sun blind

The truck can be equipped with a sun visor (2), a sun blind for the roof (1) and a sun blind for the driver's view to the front (4).

- To adjust the sun visor (2), grasp it and move it to the desired position.
- To move the sun blind (4) up and down, grasp the tab (3) and move the sun blind.
- If necessary, fully unroll the sun blind for the roof (1) and attach the ends (5) in the extended position.
- To roll up, slowly roll the blind (1) back up.

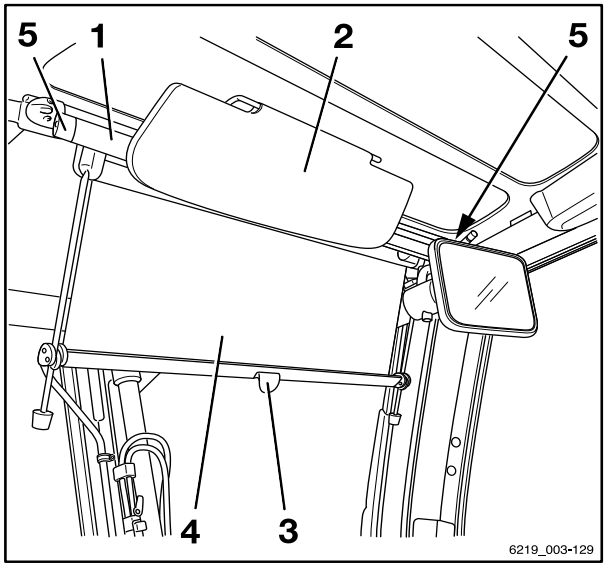

Trailer operation

Towed load

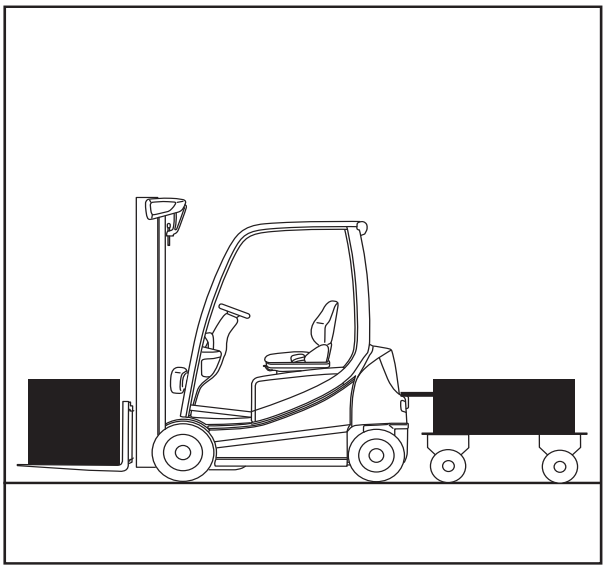

DANGER

There is an increased risk of accident when using a trailer.

Using a trailer changes the truck handling characteristics. When towing, operate the truck such that the trailer train can be safely driven and braked at all times. The maximum permissible speed when towing is 5 km/h.

- Do **not** exceed the permissible speed of 5 km/h.
- Do **not** couple the truck in front of rail vehicles.
- The truck must not be used to push any kind of trolley.
- It must be possible to drive and brake at all times.

CAUTION

Risk of damage to components!

The maximum towed load for occasional towing is the rated capacity specified on the nameplate. Overloading can lead to component damage on the truck. The sum of the actual towed load and the actual load on the fork must not exceed the rated capacity. If the towed load present corresponds to the rated capacity of the truck, it is not permitted to transport a load on the fork at the same time. The load can be distributed between the fork and the trailer.

- Check the load distribution and adjust it to correspond to the rated capacity.
- Observe the permissible rigidity value of the tow coupling.

CAUTION

Risk of damage to components!

The maximum towed load only applies when towing unbraked trailers on a level surface (maximum deviation +/- 1%) and on firm ground. The towed load must be reduced if towing on gradients. If necessary, notify the authorised service centre of the application conditions. The service centre will provide the required data.

- Inform the authorised service centre.

⚠ CAUTION

Risk of damage to components!

A support load is not permitted.

– Do not use trailers with tillers supported by the tow coupling.

This truck is suitable for the occasional towing of trailers. If the truck is equipped with a towing device, this occasional towing must not exceed 2% of the daily operating time. The manufacturer must be consulted if the truck is to be used for towing on a more regular basis.

Coupling pin in the counterweight

Coupling the trailer

⚠ DANGER

Risk to life if the truck rolls away

If you briefly leave the truck to couple it or uncouple it, there is a risk of fatal injury caused by the truck rolling away and running you over.

– Apply the parking brake.
– Lower the fork to the ground.
– Switch off the truck. Remove the switch key or block access.

– Take measures to prevent the trailer from rolling away, e.g. using wedges (1). ▷

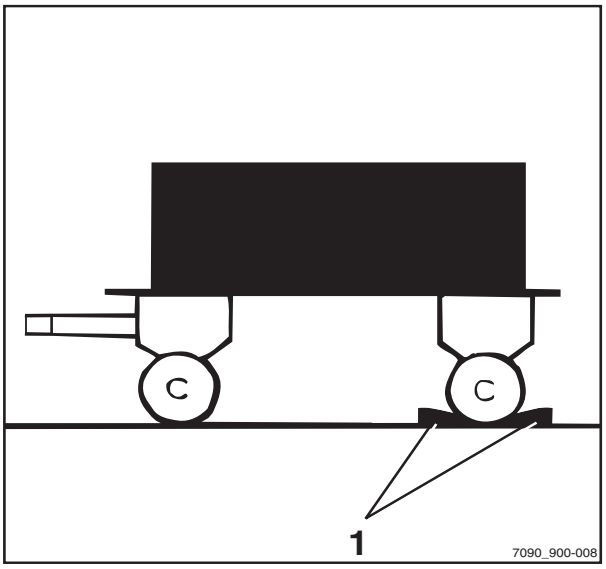

– Push the coupling pin (1) down, turn the pin by 90° and pull it out. ▷

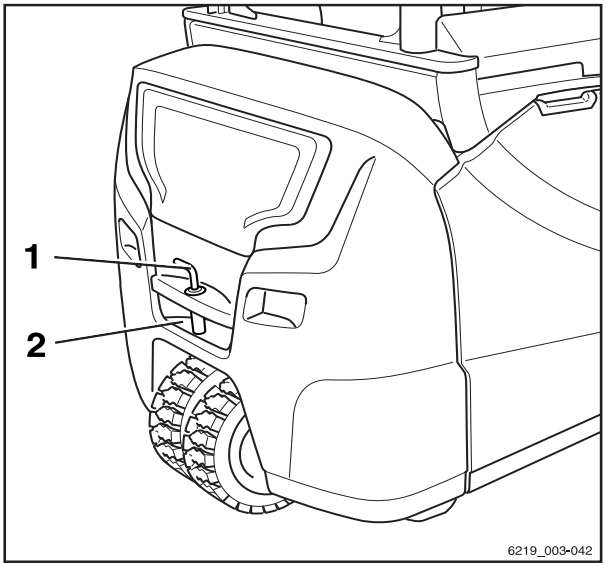

NOTE

Exceptions for the RX20-14C and RX20-16C: Turn the coupling pin (1) by 90° and pull it out.

– Adjust the height of the tiller.

DANGER

People can become trapped between the truck and the trailer.

When coupling, ensure that there are no persons present between the truck and the trailer.

– Slowly move the truck backwards.

– By moving the truck backwards, introduce the tiller into the recess (2) in the counter-weight.

DANGER

Risk of accident due to damaged or lost coupling components!

If the coupling pin or securing bush is lost or damaged during towing, the trailer will become loose and uncontrollable.

– Only use original coupling pins that have been checked.
– Ensure that the coupling pin is correctly inserted and secured.

– Insert the coupling pin into the counter-weight, press downwards against the spring pressure and turn it by 90°.

The coupling pin is now locked in this position.

NOTE

Exceptions for the RX20-14C and RX20-16C: Insert the coupling pin into the counter-weight (1) and turn it by 90°.

– Remove any items used to prevent the trailer from rolling away.

Uncoupling the trailer

– Take measures to prevent the trailer from rolling away, e.g. using wedges.

- Push the coupling pin (2) down, turn the pin by 90° and pull it out. ▷
- Slowly move the truck forwards and guide the tow-bar eye completely out of the recess (2) in the counterweight.
- Insert the coupling pin into the counter-weight, press downwards against the spring pressure and turn it by 90°.

The coupling pin is now locked in this position.

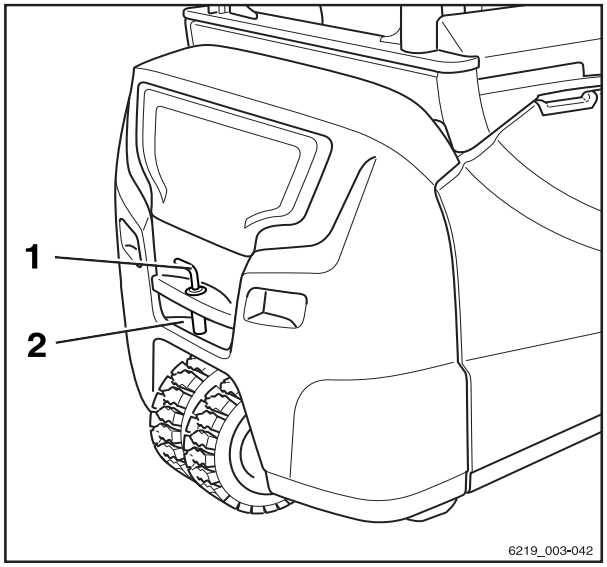

Tow coupling RO*244

⚠ DANGER

People can become trapped between the truck and trailer.

When coupling, ensure that there are no persons present between the truck and the trailer.

⚠ DANGER

Never jack up the truck on the tow coupling or use it for crane lifting. The tow coupling is not designed for this and could be deformed or damaged. This could cause the truck to fall, with potentially fatal consequences!

- Use the tow coupling only for towing.
- For jacking up and crane loading, use only the designated lifting points.

⚠ DANGER

The tow coupling is not designed for support loads and could be deformed or destroyed. This could cause the supported load to fall, with potentially fatal consequences!

- The tow coupling should be subjected only to horizontal loads, i.e. the tiller must be horizontal.

DANGER

If you briefly leave the truck to couple or uncouple the trailer, there is a risk to life caused by the truck rolling away and running you over.

- Apply the parking brake.
- Lower the forks to the ground.
- Switch off the key switch and remove the key.

WARNING

Never reach between the coupling pins and the towing jaws. If the component moves suddenly there is a risk of injury!

- To release the coupling pin, actuate the corresponding lever or use a suitable device (e.g. assembly lever).
- When not in use, close the automatic tow coupling.

WARNING

Risk of damage due to component collision.

A truck with tow coupling needs more room for manoeuvring due to its overhang. The tow coupling can damage the racking or the tow coupling itself when manoeuvring. If there is a collision with the tow coupling, check the tow coupling for damage such as cracks. A damaged tow coupling must not be used again.

- Always manoeuvre carefully and with sufficient room.
- In the case of a collision, check the tow coupling for damage.
- Replace tow coupling if damaged, if necessary contact the authorised service centre.

WARNING

Risk of damage to the tow bar eye or tiller!

Due to the truck's rear wheel steering, the side slewing angle of the tiller may not be adequate. The coupling or the tiller may be damaged! The tow bar eye of the tiller must fit the tow coupling in terms of shape and size.

- Ensure that the tow bar eye and tiller fit correctly.
- Avoid sharp cornering.
- Exercise care when travelling and manoeuvring in reverse.

WARNING

Risk of component damage if the tiller in the tow coupling is tilted!

The tiller should be kept as horizontal as possible when towing. This ensures that the rotation range is sufficient at the top and bottom. The authorised service centre can adjust the assembly height for the tow coupling to the tiller height if necessary.

- Make sure that the tiller is level.
- To change the coupling height, contact the authorised service centre.

NOTE

When manoeuvring in restricted areas, take into account the projection of the coupling.

Coupling the trailer ▷

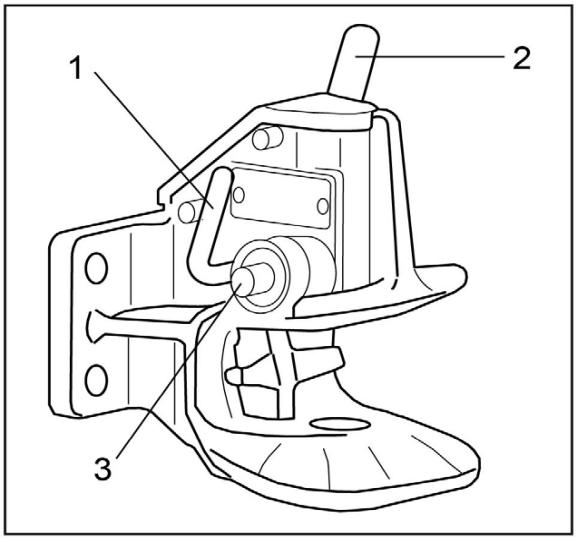

NOTE

*Tow coupling RO*244 is intended for a tow-bar eye in accordance with DIN 74054 (bore diameter 40 mm) or DIN 8454 (bore diameter 35 mm).*

- Take measures to prevent the trailer from rolling away, e.g. using wedges.
- Adjust the tow bar eye of the tiller so that it is at the centre of the towing jaws.
- Push the hand lever (2) upwards until it snaps into place.

The tow coupling is opened.

CAUTION

When being coupled, the tow-bar eye must engage in the middle of the coupling jaw. Failure to follow these instructions could result in damage to the coupling jaw or to the tow-bar eye!

- Ensure that the tow-bar eye enters the coupling jaw centrally.

- Move the truck back slowly until the tow bar eye is inserted centrally into the coupling jaw of the tow coupling and the coupling pin engages.

NOTE

The coupling pin is correctly engaged if the control pin (3) does not protrude out of its guide.

DANGER

If the coupling pin drops out during towing, the trailer will work loose and can no longer be controlled. Risk of accident!

The control pin (3) must not protrude out of its guide.

– Ensure that the coupling pin is engaged correctly.

If the coupling pin is not correctly engaged:

– Remove any items used to prevent the trailer from rolling away.
– Move the truck with the trailer forwards approx. 1 m and then move it back slightly.
– On the coupling pin, check again that the control pin does not protrude out of its guide.

– Remove any items used to prevent the trailer from rolling away.

– Tow the trailer.

Closing the coupling

DANGER

Risk of injury from hand becoming trapped!

Do not reach into the coupling pin area. If, for example, a tow rope is to be secured in the tow coupling, only actuate the tow coupling via the closing lever (1).

– Press the closing lever (1) downwards as far as it will go.

The tow coupling is closed.

Uncoupling the trailer

– Take measures to prevent the trailer from rolling away, e.g. using wedges.

– Push the hand lever (2) upwards until it snaps into place.

The tow coupling is opened.

– Slowly drive the truck forwards until the tow-bar eye and towing jaws are disconnected.

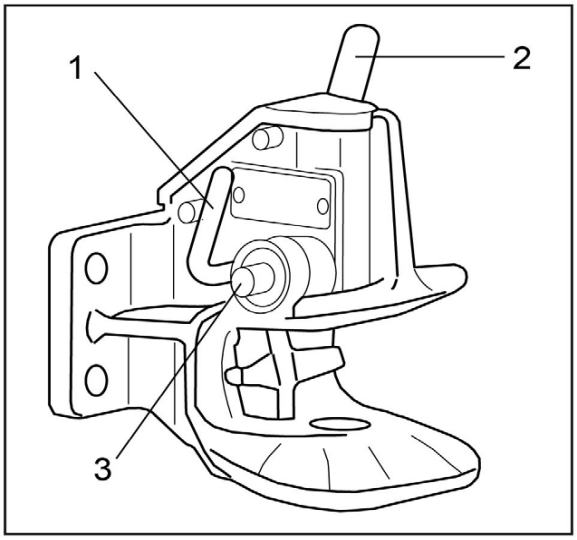

– Close the tow coupling by actuating the closing lever (1).

NOTE

To protect the lower coupling pin bush against contamination, always keep the tow coupling closed.

Towing trailers

– Drivers who are towing a trailer for the first time must practise driving with a trailer in a suitable area.
– When passing through narrow road areas (entrances, gates etc.), observe the dimensions of the trailer and load.
– When towing multiple trailers, ensure a sufficient minimum distance to fixed installations when turning and cornering.

The permissible length of the trailer trains depends on the roadways to be driven and may need to be determined during the test drive.

It is the responsibility of the operating company to instruct the drivers regarding the permissible number of trailers and, where required, any additional speed reductions on individual sections of the route.

NOTE

Please observe the definition of the following responsible persons: "operating company" and "driver".

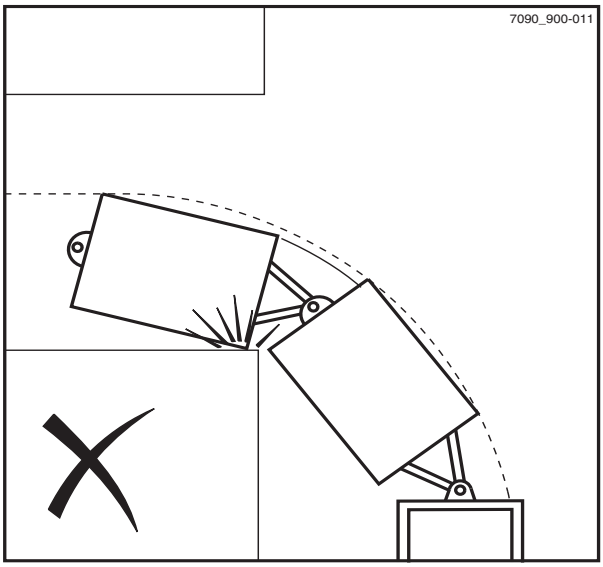

Cold store application

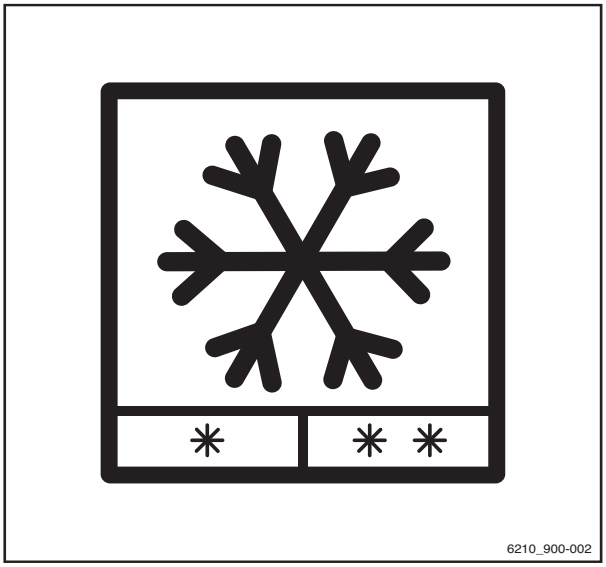

The truck is suitable for use in cold stores. Cold store equipment with low-temperature hydraulic oil may be required.

The truck is equipped for two different types of application.

The cold store symbol indicates the variant with cold store equipment that uses low-temperature hydraulic oil.

The display-operating unit is heated in this variant.

As another variant, the truck can be equipped with a driver's cab with a heating system.

Types of application

There are two different types of cold store application for the truck, distinguished by two different temperature ranges.

1. Constant use in the temperature range down to –5°C, short-term use at temperatures down to –10°C.

   Operation possible with standard equipment and standard hydraulic oil
2. Alternating between indoor use down to –32°C and outdoor use up to +25°C, briefly up to +40°C.

   Operation possible only with cold store equipment and low-temperature hydraulic oil

NOTE

When changing to a different type of hydraulic oil, the authorised service centre must adjust the truck control unit.

Operation

CAUTION

Changing from a cold internal temperature to a warm outside temperature may result in the formation of condensation water. This water may freeze on re-entry to the cold store, blocking moving parts of the truck.

It is essential that close attention is paid to the duration of deployment in the different temperature ranges for both types of application.

Before being used in the cold store, the truck must be dry and warmed up.

The truck must not leave the cold store area for more than 10 minutes. By adhering to this rule, condensation water will not have time to form.

If the truck stays outside for more than 10 minutes, it must remain there at least until the condensation water has drained away and the truck has dried off. Depending on the weather, this will take at least 30 minutes.

WARNING

Risk of injury!

If condensation water freezes in the cold store, do not try to free parts that have become stuck with your hands.

NOTE

During the warm-up phase, the hydraulic power is limited to load program "1".

– To ensure operational safety, drive the truck for approximately 5 minutes and actuate the brake several times.

– Actuate all hydraulic lifting functions several times.

This warm-up phase is necessary to ensure that the oil reaches the operating temperature.

– Always park the truck outside the cold store.

CAUTION

Risk of component damage!

The lead-acid batteries must not be left in the cold store overnight without power uptake or charging.

– Charge the battery outside the cold store and operate the truck using a replacement battery.

Using batteries in the cold store

To compensate for the reduction in capacity at low temperatures, it is advisable to use lead-acid batteries with the maximum nominal capacity in the respective battery dimensions for the truck series.

Electric trucks must not be parked in a cold area for any longer than necessary. This also applies to unused batteries. The charging station and the parking area for trucks and batteries must be at normal room temperature (not below 10°C). Charging is extremely slow at low temperatures. At temperatures below 10°C, the battery cannot be fully charged with the usual charging parameters.

– Charge the battery fully before each shift.
– During the gassing phase, always top up with distilled water.

The distilled water will mix with the battery acid so that it does not freeze.

Water top-up systems must not be used at temperatures below 0°C, as this could cause the systems and the water present in the hose lines to freeze.

The battery voltage when discharged is thus generally lower at low temperatures. The final discharged voltage is reached earlier, i.e. the capacity is lower.

Display messages

Messages

Certain truck conditions may cause event-related messages to be shown on the display of the display-operating unit.

There are messages about operation and messages about the truck. If a message about operation appears, the display-operating unit will prompt you to perform an action. A message about the truck means that the truck control unit has detected a fault.

The following types of message may appear individually or in combination:

- A graphic symbol
- The message
- A code consisting of a letter and a four-digit number

The message is displayed until either the cause has been corrected or the message has been acknowledged.

In the case of successive events, the respective messages are displayed one after another on the display.

Messages about operation

If messages about operation appear on the display-operating unit, an action must be carried out.

Shown on display	Cause/action
Log in	The access authorisation (variant) is preventing the use of the truck. - Enable the access authorisation.
Battery empty	The battery charge state is too low for truck use. - Charge the battery.
Battery: Emergency mode	The battery charge state is low. The truck experiences a power reduction. - Charge the battery.
Check battery acid level	The acid level of the lead-acid battery is too low. - Check the acid level of the battery. Correct if necessary.
Battery too cold	The lithium-ion battery is too cold. - Move the truck to a warmer environment.
Close battery door	The battery door is open. The truck will only move at a reduced speed. - Close the battery door.
Check battery door sensor	The battery door sensor does not detect that the battery door is closed. - Make sure that the lock on the battery door is engaged. If the message continues to appear, please contact the authorised service centre.
Release brake pedal !	The desired action is only possible after releasing the brake pedal. - Release the brake pedal.
Curve Speed Control Active !	Curve Speed Control reduces the curve speed. - No action is required.

Shown on display	Cause/action
Data transmission required !	If the truck is equipped with this variant, data transmission must be carried out. - See the associated instructions.
Diagnostic mode active ⚠	This message is not displayed during normal operation. - Contact the authorised service centre.
Set revolution speed	If an attachment is fitted and no pump speed has been set for its direction of movement, this message will be displayed. - Set the revolution speed with the access authorisation.
Development mode active ⚠	This message is not displayed during normal operation. - Contact the authorised service centre.
Drive unit blocked !	This message follows earlier messages, e.g. overtemperature. It is not possible to drive the truck. - Wait until the message disappears. If necessary, switch the truck off and on again. If the message continues to appear, please contact the authorised service centre.
Sit on driver's seat	The truck is equipped with a seat contact switch. If the driver's seat is not occupied, the drives are disabled. - Sit on the driver's seat.
Secure the truck to prevent it rolling away ⚠	If the truck control unit detects a movement of the truck without the accelerator pedal being actuated, this message appears. - Apply the parking brake. - If necessary, secure the truck with wedges so that it cannot roll away.
Switch off truck?	If the truck is switched off without having first applied the parking brake, this message appears. - Apply the parking brake.
Switch off truck anyway?	If the truck is to be switched off although the parking brake is not applied, this message appears. - Secure the truck with wedges so that it cannot roll away.
Truck stop: Access system	The access authorisation (variant) is preventing the use of the truck. This can be caused by entry of an incorrect code. - Enable the access authorisation.
Fault: Battery	The truck control unit detects an error in the lithium-ion battery. - Switch the truck off and on again. - If the message continues to appear, please contact the authorised service centre.

Shown on display	Cause/action
Apply parking brake	If the truck control unit detects a movement of the truck without the accelerator pedal being actuated, this message appears. - Apply the parking brake.
Release parking brake	The desired action is only possible after releasing the parking brake. - Release the brake pedal.
Check parking brake ⚠	The truck control unit detects that the braking force of the electric parking brake is reducing. - Secure the truck with wedges so that the truck does not roll away. - Contact your authorised service centre.
Parking brake cannot be applied	The parking brake cannot be applied due to a technical fault. - Apply the parking brake according to the section entitled "Malfunctions in the electric parking brake". - Secure the truck with wedges so that it cannot roll away.
Apply parking brake via button	The electric parking brake is not applying automatically. - Apply the parking brake by pressing the button.
Release parking brake via button	The electric parking brake cannot be released automatically. - Release the parking brake by pressing the button.
Parking brake: Maintenance required	The truck control unit detects that the electric parking brake needs a service. - Secure the truck with wedges so that the truck does not roll away. - Contact your authorised service centre.
Lower forks !	This message appears e.g. for precision load measurement (variant). - Lower the fork carriage.
Lift height restriction active !	The lift height restriction (variant) is switched on. - Observe the heights of ceilings and entrances.
Close cab door or seat belt !	If the seat belt is not fastened and the cab door (variant) is not closed, the driving speed is limited to 4 km/h and this message appears. - Close the cab door or fasten the seat belt.
Close cab door !	If the cab door is opened while the truck is in motion, the truck brakes automatically to a speed of 4 km/h. - Close the cab door.
Configuration: Please wait	This message is not displayed during normal operation. - Contact the authorised service centre.

Shown on display	Cause/action
Remove charging cable	If the truck is equipped with an integrated charger (variant) and charging is complete, this message appears. - Disconnect the charger plug from the plug connection on the truck.
Start charging?	If the truck is fitted with an integrated charger (variant) and the truck control unit detects that a charger plug is inserted, this message appears. - Press the relevant softkey to start charging.
Unsent data will be overwritten !	If the truck is equipped with this variant, data transmission must be carried out. - See the associated instructions.
Emergency off active	If the truck is switched on and an operating device is actuated when the emergency off switch is pressed, this message appears. The desired action is only possible once the emergency off switch is unlocked. - Unlock the emergency off switch.
Emergency operation !	If the truck experiences a power reduction, for example due to a battery charge state that is too low, this message appears. - Observe the previous message.
Emerg. direct. via drive direction lever	If the truck control unit has detected a fault that affects the drive functions, it is possible to activate emergency running. - Set the direction selection lever to the desired direction. - Drive the truck to a safe area and park it safely. - Contact your authorised service centre.
Emerg. direct. via drive direction switch	If the truck control unit has detected a fault that affects the drive functions, it is possible to activate emergency running. - Set the drive direction switch to the desired direction. - Drive the truck to a safe area and park it safely. - Contact your authorised service centre.
Parameter calibration	This message is not displayed during normal operation. - Contact the authorised service centre.
Seatbelt sequence !	If the configured sequence for applying the restraint systems is not observed, this message appears. - Fasten the seat belt.
Close restraint system	If, for example, the truck is equipped with a bracket as a restraint system and the accelerator pedal is actuated, this message appears. The truck will not move. - Close the restraint system.

Shown on display	Cause/action
Shaking blocked – overload ⚠	If the shaking function (variant) is overloaded by an excessive load, this message appears. The shake function will remain unavailable as long as this situation persists.
Switch on switch lock !	If the hazard warning system (variant) is switched on when the truck is switched off, the display-operating unit remains active. Then, when a truck function is called up, this message appears. - Switch on the truck.
Shock event detected !	If the truck control unit detects a very strong acceleration or deceleration, e.g. in the event of an accident, this message appears.
Service required	If the maintenance interval has been reached, this message appears. - Contact the authorised service centre.
Service mode active ⚠	This message is not displayed during normal operation. - Contact the authorised service centre.
Close seat belt	If the seat belt is not fastened, the driving speed is limited to 4 km/h and this message appears. - Fasten the seat belt.
Are you sure? ?	If the display-operating unit is expecting confirmation from the driver, this message appears. - Continue with or cancel the input prompt.
Enable sprint mode !	If the battery is charged after locking sprint mode or a normal temperature is reached, this message appears. Sprint mode can be used again once the truck has been restarted.
Sprint mode blocked – battery	If the battery experiences under-voltage or too high a temperature, this message appears. Sprint mode is no longer available. - Observe the previous message.
Sprint mode blocked – temperature	If the temperature at the drive units is too high, this message appears. Sprint mode is no longer available. - Observe the previous message.
Dead man switch ⚠	If the truck is equipped with a foot switch, and a truck function is called up when the foot switch is not actuated, this message appears. - Actuate the foot switch.
Overload	With the "overload protection" variant, this message appears if an excessive load is picked up. - Set down the load.
Battery overtemperature	If the truck control unit detects an excessive battery temperature, this message appears. - Allow the truck to cool down.
Working mode active ⚠	This message is not displayed during normal operation. - Contact the authorised service centre.

Shown on display	Cause/action
Access expired !	If the truck is equipped with this variant, this message might appear. - See the associated instructions.
Access denied !	
Access expires in < 1 month !	
Access expires in < 1 day !	
Access expires in < 1 week !	
Access expires in < 2 days !	
Access expires in < 3 days !	

Messages about the truck

If messages with a code appear on the display-operating unit, the truck control unit has detected a fault. The message with a code is stored in the message list until the cause of the message is corrected. The saved messages can be called up from the "message list".

If, for example, the reflector or the lift-height sensor is contaminated, it usually helps to clean these components.

– Switch the truck off and on again.

– If the message still appears, please contact the authorised service centre.

The messages are sorted in ascending order according to their code:

Code	Shown on display	Description/possible solution
A2103	Parameter faulty ⚠	Collective fault of the parameters
A2305	Fault: Control unit ⚠	Collective fault on the control unit
A2545	Actuator error 9: ⚠	Actuator breakdown If no attachment is fitted, this message can be ignored. - If there is an attachment fitted, contact the authorised service centre.
A2801	Monitoring ⚠	Process monitoring, proc 1
A2802	Monitoring ⚠	Process monitoring, proc 2
A2803	Monitoring ⚠	Process monitoring, proc 3
A2804	Monitoring ⚠	Process monitoring, proc 4
A2805	Monitoring ⚠	Process monitoring, proc 5

Code	Shown on display	Description/possible solution
A2806	Monitoring ⚠	Process monitoring, proc 6
A2807	Monitoring ⚠	Process monitoring, proc 7
A2808	Monitoring ⚠	Process monitoring, proc 8
A2809	Monitoring ⚠	Process monitoring, proc 9
A2810	Monitoring ⚠	Process monitoring, proc 10
A2811	Monitoring ⚠	Process monitoring, proc 11
A2899	Monitoring ⚠	Collective fault of the process monitoring
A3015	Fault: Brake sensor	Collective fault on the brake sensor
A3027	Fault: Seat switch	The seat switch does not open - Stand up from the driver's seat and sit down again.
A3035	Fault: Brake fluid	Brake fluid switch
A3143	Check lift height sensor and reflector ⚠	Lift-height sensor measurement error
A3151	Plausibility of shift function hydraulics ⚠	If no attachment is fitted, this message can be ignored. - If there is an attachment fitted, contact the authorised service centre.
A3230	Fault: Monitoring of steering ⚠	Collective fault on the steering
A3340	Monitoring: Electrics ⚠	Collective fault on the additional electrical installation
A3345	Monitoring: Electrics ⚠	Collective fault on the powertrain
A3346	Monitoring: Drive unit ⚠	Collective fault on the drivetrain
A3347	Hydraulics	If no attachment is fitted, this message can be ignored. - If there is an attachment fitted, contact the authorised service centre.
A5090	Overtemp.: Drive unit	Drive unit overtemperature collective fault - Switch off the truck and leave it to cool down.
A5091	Overtemp.: Hydraulic drive	Hydraulic drive overtemperature collective fault - Switch off the truck and leave it to cool down.
A5934	Fault: Internal charger ⚠	Error on the charging connector detection - Disconnect the connection assembly and reconnect it.
A5961	Battery overtemperature	Overtemperature of the lithium battery - Switch off the truck and leave it to cool down.
A5962	Battery too cold	Insufficient lithium battery temperature - Move the truck to a warmer environment.
A5986	Fault: Control unit ⚠	General battery current measurement

Code	Shown on display	Description/possible solution
A5993	Fault: Internal charger ⚠	On-board charger collective fault
A6210	Fault: Battery ⚠	Lithium battery collective fault
A6502	Overtemp.: Parking brake (!)	Electric parking brake detects overtemperature
A6510	Fault: Parking brake (!)	Electric parking brake detects fatal fault
A6511	Fault: Parking brake (!)	Brake cannot release
A6512	Fault: Parking brake (!)	Brake cannot apply
A6701	Fault: Monitoring of assistance system ⚠	Collective fault on the assistance systems
None	Error ⚠	General fault

Procedure in emergencies

Emergency shutdown

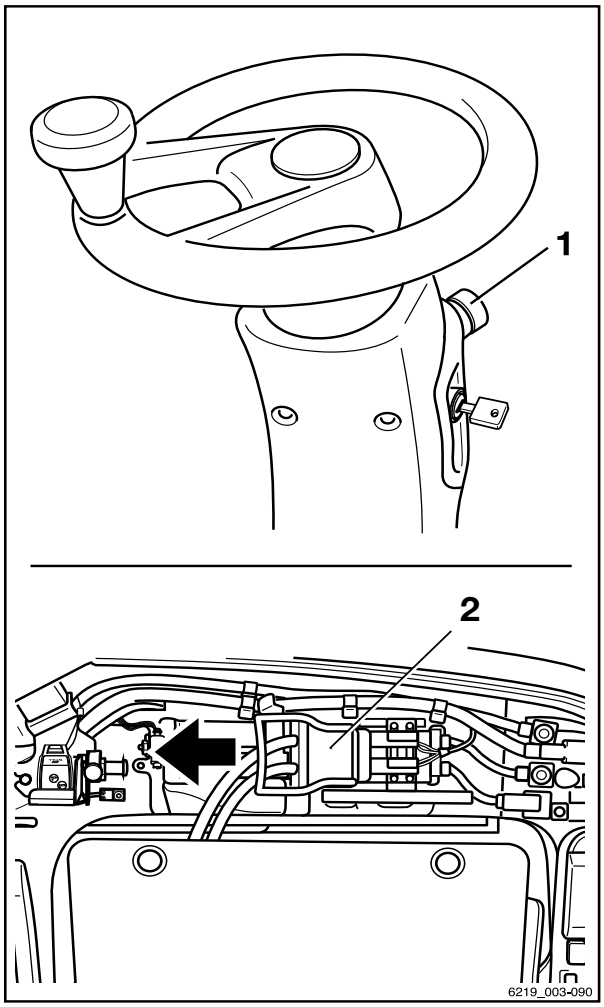

WARNING

No electric braking assistance is available when the emergency off switch is actuated!

Actuating the emergency off switch (1) disconnects the drives from the power supply. The regenerative brake will not hold the truck on a slope.

– To brake, actuate the service brake.

CAUTION

Actuating the emergency off switch (1) disconnects the drives from the power supply. Disconnecting the battery male connector (2) disconnects the entire truck from the power supply.

– Only use this safety system in an emergency or in order to park the truck safely.

CAUTION

Potential for damage to the battery male connector!

If the battery male connector is disconnected while the key switch is on (under load), an arc will be produced. This can lead to erosion at the contacts, which considerably shortens the service life of the contacts.

– Switch off the key switch before disconnecting the battery male connector.
– Do not disconnect the battery male connector while the key switch is switched on, except in an emergency.

In an emergency, all functions of the truck can be shut down:

– Press the emergency off switch (1) or disconnect the battery male connector (2).

In drive mode, pressing the emergency off switch (1) has the following effects:

- No reduction in truck speed when the accelerator pedal is released, according to the drive programme selected. The truck will coast to a stop.
- In trucks with an electric parking brake (variant), the electric parking brake is applied as soon as the truck comes to a stop.

- The regenerative brake does not function during the first part of the brake pedal travel:
  To decelerate the truck using the mechanical brake, the brake pedal has to be pressed down further.
- The truck can only be held on a slope using the mechanical brake, not the regenerative brake.
- No power steering effect; the steering forces are increased by the remaining emergency steering function
- The "Curve Speed Control" system (automatic reduction in truck speed when cornering) does not function. Stop the truck using the service brake.
- No hydraulic functions are available.

Procedure if truck tips over

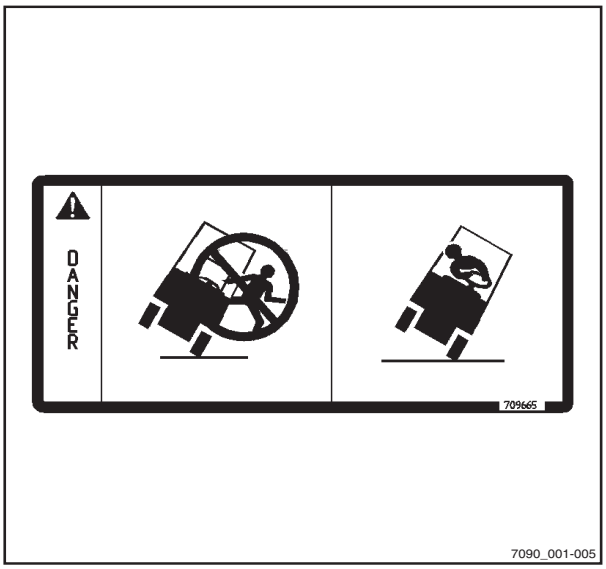

DANGER

If the truck tips over, the driver could fall out and slide under the truck with potentially fatal consequences. There is a risk to life.

Failure to comply with the limits specified in these operating instructions, e.g. driving on unacceptably steep gradients or failing to adjust speed when cornering, can cause the truck to tip over. If the truck starts to tip over, do not leave the truck under any circumstances. This increases the danger of being hit by the truck.

– Do not release your seat belt.
– Never jump off the truck.
– You must adhere to the rules of behaviour if the truck tips over.

Rules of behaviour if truck tips over:

– Hold onto the steering wheel with your hands.
– Brace your feet in the footwell.
– Bend your upper body over the steering wheel.
– Bend your body against the direction of the fall.

Emergency hammer

The emergency hammer is used to rescue the driver if he is shut inside the cab in a hazardous situation, for example if the truck has toppled over and the cab door cannot be opened.

Single-pane safety glass can be struck relatively safely using the emergency hammer in order for the driver to escape or be rescued from the danger area.

Using the emergency hammer

⚠ WARNING

When glass is smashed there is a risk of injury caused by glass splinters!

When the cab glass is smashed, splinters of glass can shoot into the face and cause damage to skin and eyes through cuts. When a pane of glass is smashed, the face should be turned away and covered with the crook of the free arm.

– Protect the face when smashing a pane of glass.

– Pull the emergency hammer out of its support mounting at the handle.

– Using one of the two metal tips on the head of the emergency hammer, hit the pane of glass with force until it breaks.

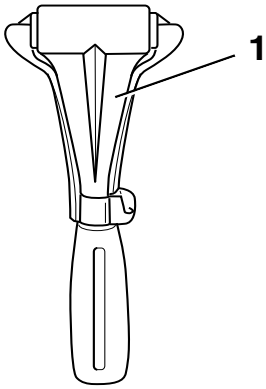

Emergency lowering

If the hydraulic controller fails whilst a load is raised, emergency lowering can be performed. An emergency lowering screw is located on the valve block (3) for this purpose.

DANGER

There is a risk of fatal injury from falling loads or parts of the truck being lowered.

- Do not walk beneath the raised load.
- Adhere to the steps detailed below.

- Remove the lid (1) on the right-hand side of footwell panelling near the accelerator pedal.
- Remove the hexagon socket wrench (2) from the compartment on the right next to the driver's seat.
- Using the hexagon socket wrench, turn the emergency lowering screw (3) a maximum of 1.5 revolutions to loosen it.

WARNING

The load is lowered!

The lowering speed is regulated by unscrewing the emergency lowering screw.

- Note the list of points below.

The following applies:

- Tightening torque:
  Max. 2.5 Nm
- When unscrewed a little:
  The load lowers slowly
- When unscrewed a lot:
  The load lowers quickly

After lowering:

- Screw the emergency lowering screw in again.
- Return the hexagon socket wrench to the support mounting in the compartment.
- Refit the lid.

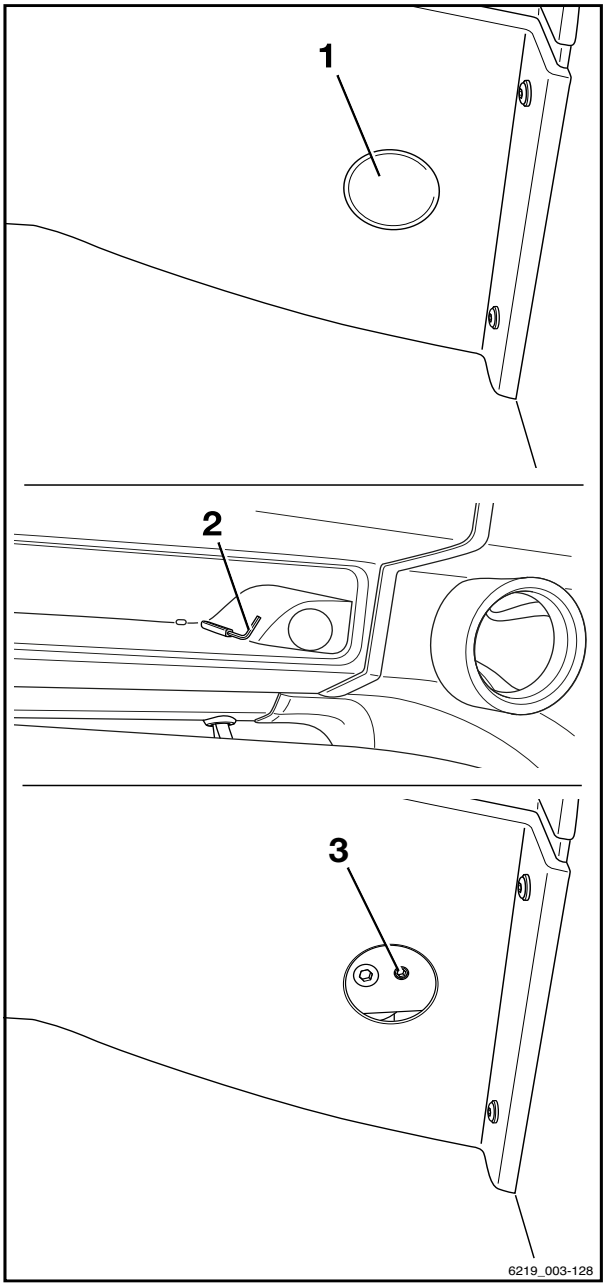

DANGER

If the truck is operated while the hydraulic controller is blocked, there is an increased risk of accidents.

– After the emergency lowering procedure, have the malfunction rectified.
– Notify your authorised service centre.

Emergency actuation of the electric parking brake (variant)

DANGER

There is a risk of fatal injury from being run over if the truck rolls away.

The truck can roll away when the parking brake is released.

– In an emergency, secure the truck with wedges on the downhill-facing side to prevent it rolling away.
– Only perform an emergency release of the parking brake if the truck is at a standstill and the fork is lowered.

The electric parking brake can be released and applied via an emergency control.

An emergency actuation of the electric parking brake must be performed under the following conditions:

- The electric parking brake is not operating properly.
- The truck is being transported without a battery.

NOTE

If the parking brake is released via the emergency actuation process, it is possible to drive the truck at a low speed.

- *The truck can then be moved out of the hazardous situation or to the repair location.*
- *Driving with a faulty parking brake requires the driver to be especially vigilant.*

– Lift the cover (2) and fold it up.
– Pull out the hand wheel (1).

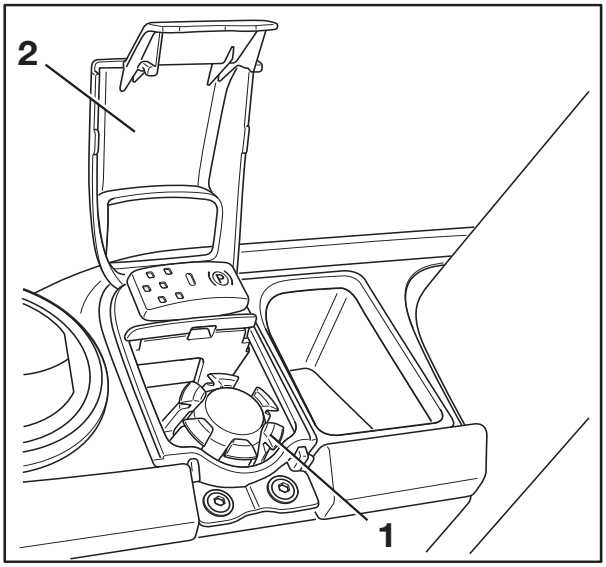

– Turn the hand wheel (1) round and then attach it.

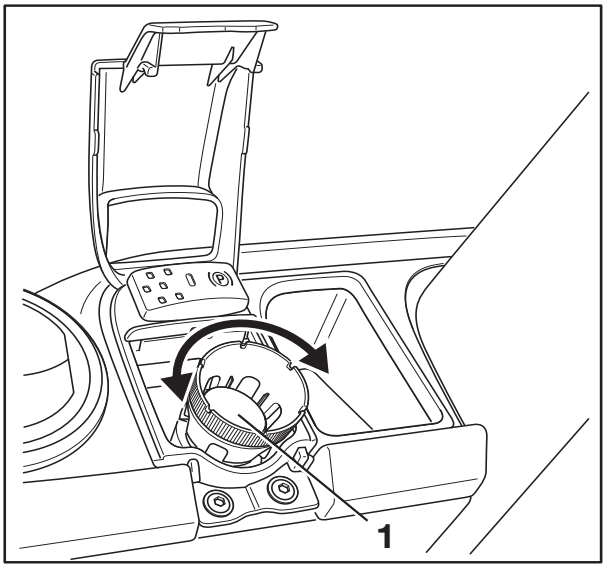

Releasing the parking brake ←(Ⓟ)→

– To release the parking brake, gently turn the hand wheel (1) anti-clockwise until the lower limit stop is reached.

Applying the parking brake →(Ⓟ)←

– To apply the parking brake, turn the hand wheel (1) clockwise until the force required to do so increases significantly and the truck is held securely.
– Remove the hand wheel (1), turn it round and then insert it again.
– Fold the cover down again.
– If the condition of the parking brake cannot be reliably determined, secure the truck with wedges.

Towing

Safety information

DANGER

The brake system on the towing vehicle may fail. Risk of accident!

If the brake system of the towing vehicle is not adequately sized, the vehicle may not brake safely or the brakes may fail. The towing vehicle must be able to absorb the pulling forces and braking forces from the unbraked towed load (total actual weight of the truck).

– Check the pulling force and braking force of the towing vehicle.

DANGER

The truck could drive into the towing vehicle when the towing vehicle brakes. Risk of accident!

If a rigid connection has not been used for bidirectional power transmission during towing, the truck may drive into the towing vehicle when the towing vehicle brakes. For safety reasons, only a tested tow bar may be used.

– Use a tested tow bar.

CAUTION

If the truck drive between the drive motor and the drive axle is not interrupted, the drive may be damaged.

– Set the drive direction switch to the neutral position.

CAUTION

Potential for damage to the battery male connector!

If the battery male connector is disconnected while the key switch is on (under load), an arc will be produced. This can lead to erosion at the contacts, which considerably shortens the service life of the contacts.

– Switch off the key switch before disconnecting the battery male connector.

– Do not disconnect the battery male connector while the key switch is switched on, except in an emergency.

▷

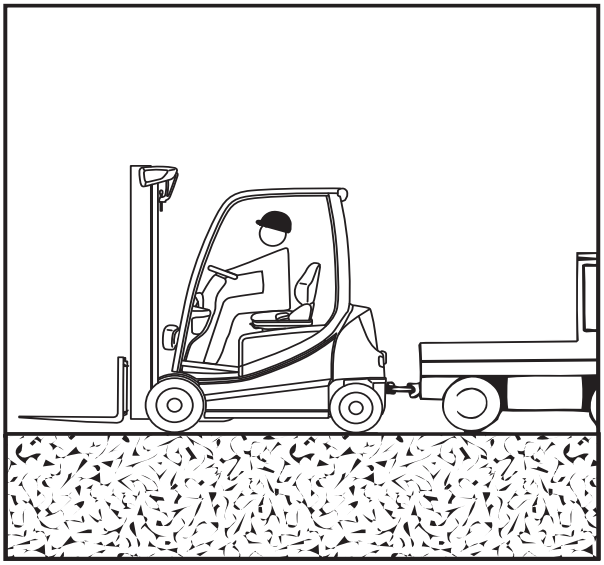

DANGER

Risk to life when manoeuvring!

People can be crushed between the truck and the towing vehicle during manoeuvring.

To ensure that the driver of the towing vehicle and the fitter attaching the tow bar are made aware of possible risks, the towing vehicle may only be manoeuvred and the tow bar may only be attached when a second person is acting as a guide.

– Only manoeuvre with a guide.

WARNING

Risk of accident if the hydraulics fail!

If the hydraulics fail, the power steering will no longer function. The steering is stiff.

– Select a towing speed that allows the truck and the towing vehicle to be braked and controlled effectively at all times.

WARNING

Risk of accident if the truck is not steered!

If the truck is not steered while it is being towed, it may veer out in an uncontrolled manner.

The truck being towed must also be steered by a driver.

The driver of the truck being towed must sit in the driver's seat and fasten the seat belt before towing.

– Use the available restraint systems!

Procedure

– Set down the load and lower the fork arms close to the ground.

– Set the drive direction switch to the neutral position.

– Apply the parking brake.

– Switch off the truck.

– Disconnect the battery male connector.

– Check the pulling force and braking force of the towing vehicle.

– With the help of a guide, move the towing vehicle to the truck.

– Secure the tow bar to the tow coupling on the towing vehicle and the truck.

Procedure in emergencies

- Sit on the driver's seat in the truck to be towed. Fasten the seat belt.
- Use the available restraint systems.
- Release the parking brake.
- Select a towing speed that allows the truck and the towing vehicle to be braked and controlled effectively at all times.
- Tow the truck.
- After towing, secure the truck so that it cannot roll away, e.g. by applying the parking brake or by using wedges.
- Remove the tow bar.

NOTE

Emergency actuation of the electric parking brake (variant) may be necessary on a faulty truck; see the section above entitled "Emergency actuation of the electric parking brake".

Connecting and disconnecting the battery male connector

Connecting the battery male connector ▷

– Open the battery door.

⚠ CAUTION

Potential for damage to the battery male connector!

If the battery male connector is connected while the key switch is on (under load), a jump spark will be produced. This jump spark can damage the contacts and considerably shorten the service life of the contacts.

– Do not connect the battery male connector with the key switch switched on.
– Make sure that the key switch is switched off before connecting the battery male connector.

– Ensure that the battery male connector (2) and the plug connection (3) are dry, clean and free of foreign objects.

– Insert the battery male connector (2) fully into the plug connection on the truck.

The orange latch (1) must engage.

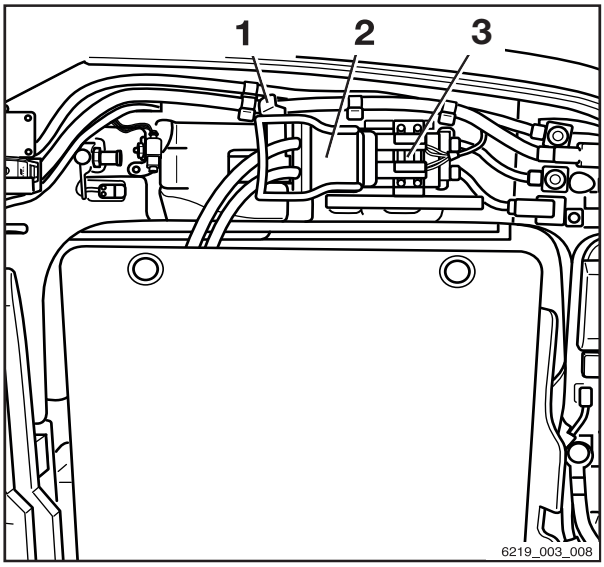

Illustration of a lead-acid battery

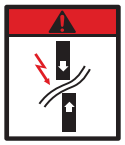

⚠ CAUTION

There is a risk of short circuit if the cables are damaged.

Do not crush the battery cable when closing the battery door.

– Ensure that the battery cable does not come into contact with the battery door.

NOTE

The appearance of a lithium-ion battery differs from this illustration. The battery male connector also features additional contacts that the battery uses to communicate with the truck control unit. However, the connection procedure is the same.

– Close the battery door.

Disconnect the battery male connector ▷

– Open the battery door.

⚠ CAUTION

Potential for damage to the battery male connector!

If the battery male connector is disconnected while the key switch is on (under load), an arc will be produced. This can lead to erosion at the contacts, which considerably shortens the service life of the contacts.

– Switch off the key switch before disconnecting the battery male connector.
– Do not disconnect the battery male connector while the key switch is switched on, except in an emergency.

– Press the orange latch (1).

The battery male connector unlocks.

– Pull out the battery male connector (2) from the plug connection (3) on the truck and set it down safely.

⚠ CAUTION

There is a risk of short circuit if the cables are damaged.

Do not crush the battery cable when closing the battery door.

– Ensure that the battery cable does not come into contact with the battery door.

NOTE

The appearance of a lithium-ion battery differs from this illustration. The battery male connector also features additional contacts for communication between the battery and the truck control unit. However, the disconnection procedure is the same.

– Close the battery door.

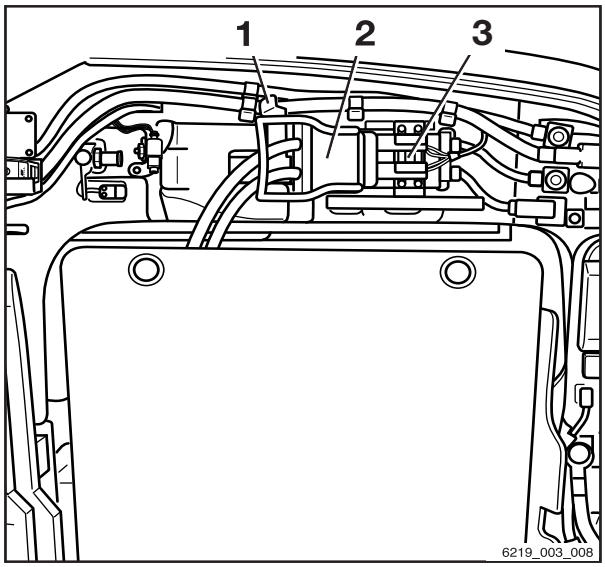

Illustration of a lead-acid battery

Handling the lead-acid battery

Safety regulations for handling the battery

– National statutory provisions for the country of use must be followed when setting up and operating battery charging stations.

⚠ CAUTION

Potential for damage to the battery charger!

Incorrect connection or incorrect operation of the charging station or the battery charger may result in damage to components.

– Follow the operating instructions for the charging station or battery charger and for the battery.

– Observe the following safety regulations when maintaining, charging and changing the battery.

Maintenance personnel

Batteries may only be charged, maintained or replaced by properly trained personnel in accordance with the instructions from the manufacturers of the battery, battery charger and truck.

– The handling instruction for the battery and the operating instructions for the battery charger must be followed.

– Observe the following safety regulations when maintaining, charging and changing the battery.

WARNING

Risk of crushing/shearing!

The battery is very heavy. There is a risk of serious injury if any parts of the body are caught under the battery.

There is a risk of injury if any parts of the body are wedged between the battery door and the edge of the chassis when the battery door is closed.

- Always wear safety shoes when replacing the battery.
- Only close the battery door if there are no parts of the body between the battery door and the edge of the chassis.

The battery must only be replaced in accordance with the directions in these operating instructions.

- When charging and maintaining the battery, observe the manufacturer's maintenance instructions for the battery and the battery charger.

Fire protection measures

DANGER

Risk of explosion due to flammable gases!

During charging, the battery releases a mixture of oxygen and hydrogen (oxyhydrogen gas). This gas mixture is explosive and must not be ignited.

There must be no flammable materials or spark-forming operating materials within 2 m of either the truck when it is parked for charging or the battery charger.

- When working with batteries, take the following safety precautions.

- Keep away from open flames and do not smoke.
- Ensure that work areas are adequately ventilated.
- Disconnect the battery male connector before charging and only when the truck and battery charger are switched off.

- The battery door must remain open during charging.
- Expose the surfaces of the battery cells.
- Do not place any metal objects on the battery.
- Fully open any protective structures (e.g. fabric-covered cab).
- Have fire extinguishing equipment ready.

Battery weight and dimensions

DANGER

Risk of tipping due to change in battery weight!

The battery weight and dimensions affect the stability of the truck. When replacing the battery, the weight ratios must not be changed. The battery weight must remain within the weight range specified on the nameplate.

- Do not remove or change the position of ballast weights.
- Note the battery weight.

Performing battery maintenance

The cell covers of the battery must be kept dry and clean.

Terminals and cable shoes must be clean, lightly coated with battery grease and screwed on tightly.

- Neutralise any spilt battery acid immediately.
- Observe the safety regulations for handling battery acid; see the chapter entitled "Battery acid".

Damage to cables and battery male connectors

CAUTION

There is a risk of short circuit if the cables are damaged.

Do not crush the battery cable when closing the battery door.

- Check the battery cable for damage.
- When removing and reinstalling the battery, ensure that the battery cables are not damaged.
- Ensure that the battery cable does not come into contact with the battery door.

▷

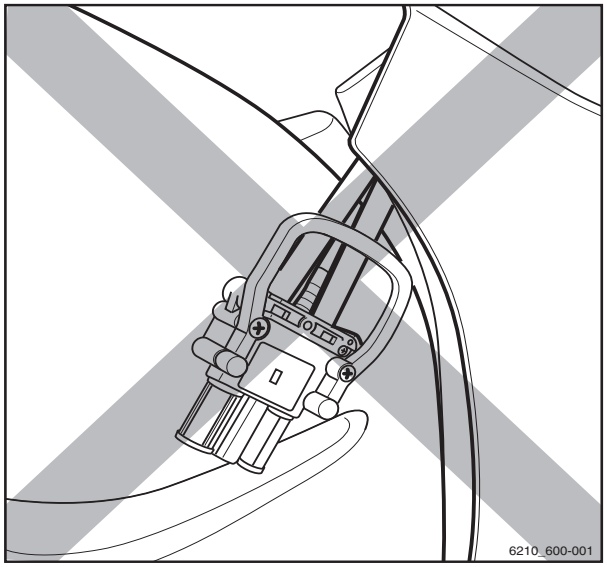

CAUTION

Potential for damage to the battery male connector!

If the battery male connector is disconnected or connected while the key switch is switched on or while the battery charger is under load, an arc or a transition spark will be produced at the battery male connector. This can lead to erosion at the contacts and can considerably shorten the service life of the contacts.

- Switch off the key switch or the battery charger before the battery male connector is disconnected or connected.
- Do not disconnect the battery male connector while under load, except in an emergency.

Maintaining the battery

DANGER

Danger to life and limb!

- Observe the instructions in the chapter entitled "Safety regulations when handling the battery".

WARNING

Battery acid is toxic and corrosive!

- Observe the safety regulations in the chapter entitled "Battery acid".

NOTE

Battery maintenance is carried out in accordance with the battery manufacturer's operating instructions. The operating instructions for the battery charger must also be followed. Only the instructions that came with the battery charger are valid. If any of these instructions are missing, request the relevant instructions from the dealer.

The battery maintenance information is composed of the following sections: "Checking the status, acid level and acid density of the battery", "Checking the battery charge status", "Charging the lead-acid battery" and "Equalising charge to maintain the battery capacity".

Checking the battery condition, acid level and acid density

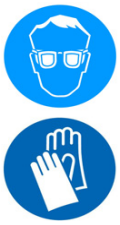

WARNING

The electrolyte (dilute sulphuric acid) is poisonous and caustic!

- Observe safety regulations for handling battery acid; see chapter "Battery acid".
- Wear personal protective equipment (rubber gloves, apron and protection goggles).
- Rinse away spilt battery acid immediately with plenty of water!

CAUTION

Risk of damage!

- Heed the information in the operating instructions for the battery.

- Remove the battery from the truck.
- Inspect battery for cracked housing, raised plate sand acid leaks.
- Have defective batteries repaired by the authorised service centre.
- Open filler cap (1) and check the acid level. ▷

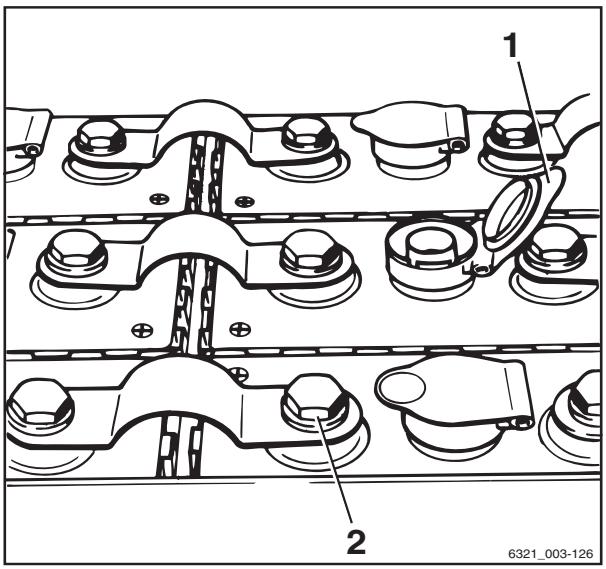

For batteries with "caged cell plugs", the liquid must reach the bottom of the cage.

For batteries without "caged cell plugs", the liquid must reach a height of approx. 10 to 15 mm above the lead plates.

- Top up missing fluid with distilled water only.
- Clean the battery cell cover and dry if necessary.
- Remove any oxidation residues on the battery terminals and then apply acid-free grease to the terminals.
- Tighten the battery-terminal clips (2) to a torque of 22–25 Nm (depending on the size of the terminal screws used).
- Check acid density with an acid siphon.

After charging, the acid density must be between 1.28 and 1.30 kg/l.

For a discharged battery, the acid density must be **no lower** than 1.14 kg/l.

Checking the battery charge status ▷

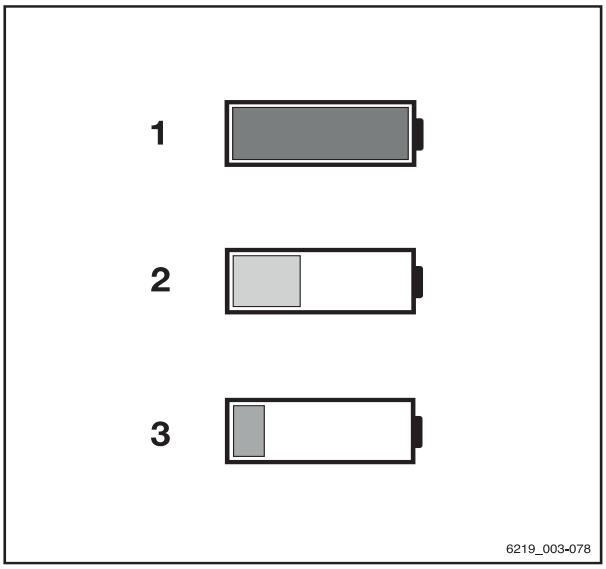

⚠ CAUTION

Deep discharges shorten the service life of the battery.

Deep discharge begins when the battery charge display is red (3) (0% of the available battery capacity, i.e. approx. 20% of the nominal capacity).

- Deep discharge must be avoided (see the section entitled "Equalising charge to prevent a deep discharge of the battery").
- Stop working with the truck immediately.
- Charge the battery immediately.
- Do not leave batteries in a discharged or partly discharged state.

- Apply the parking brake.
- Switch on the truck.
- Read the charge status on the display of the display/operating unit.
- Charge a discharged or partly discharged battery.

Meaning of the colours in the display

1 Green:
The battery is sufficiently charged

2 Yellow:
Charge the battery soon.

3 Red:
Stop working. Charge the battery immediately. The battery is at risk of deep discharge.

Charging the lead-acid battery

CAUTION

Potential for damage to the battery charger!

Incorrect connection or incorrect operation of the charging station or the battery charger may result in damage to components.

– Follow the operating instructions for the charging station or battery charger and for the battery.

CAUTION

Potential for damage to the battery male connector!

If the battery male connector is disconnected while the truck is switched on (under load), an electric arc will be produced. This can lead to erosion of the contacts, which considerably shortens the service life of the contacts.

– Switch off the truck before the battery male connector is disconnected.
– Do not disconnect the battery male connector while the truck is switched on, except in an emergency.

– Park the truck securely.
– Ensure that work areas are adequately ventilated.
– Fully open any protective structures (e.g. fabric-covered cab).
– Open the battery door completely.
– Disconnect the battery male connector.
– Do not place any metal objects or tools on the battery.
– Keep away from naked flames. Do not smoke.
– Check the battery cables for damage. If necessary, have the battery cables replaced by the authorised service centre.

DANGER

Explosive gases are generated during charging.

- Ensure that work areas are adequately ventilated.
- For trucks with cabs (including fabric-covered cabs), ensure adequate ventilation in the cab (variant).

DANGER

Risk of damage, short circuit and explosion from metallic objects on the battery!

- Do not place any metal objects or tools on the battery.
- Keep away from naked flames.
- Do not smoke.

WARNING

Battery acid is toxic and corrosive!

- Observe the safety regulations in the chapter entitled "Battery acid".

- Connect the battery male connector to the plug on the battery charger.
- Start the battery charger.

NOTE

Observe the information in the operating instructions for the battery and the battery charger.

DANGER

Risk of explosion!

The battery door must be kept slightly open during the charging process to ensure sufficient ventilation.

The battery door can be locked in the open position using a support bracket.

- Pull the support bracket (1) up and out of its support eyelet (2) on the battery door.
- Swing the support bracket (1) outwards in an anticlockwise direction.
- Press down on the support bracket (1) to clip it into the support eyelet (3) on the truck.

The battery door will lock into a slightly open position.

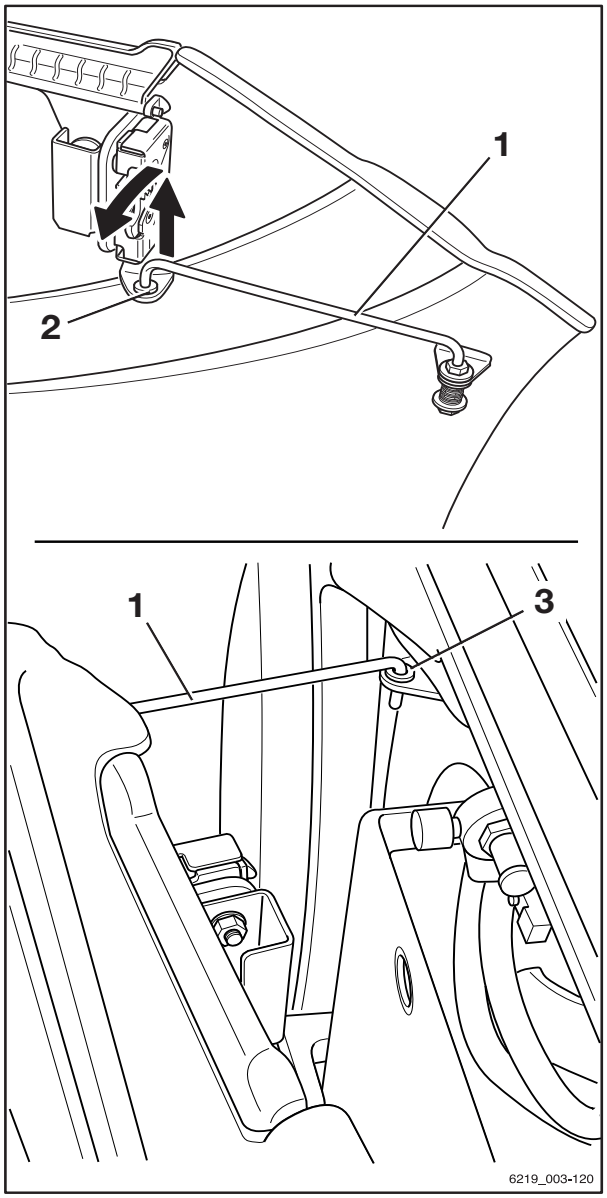

After charging

⚠ CAUTION

Risk of component damage!

- Switch off the battery charger before disconnecting the charging cable.

- Switch off the battery charger.
- Swing the support bracket (1) back into position and lock it into the support eyelet (2) on the battery door.
- Open the battery door and lock it into the open position.
- Disconnect the battery male connector from the plug for the battery charger.
- Insert the battery male connector fully into the plug connection on the truck.

⚠ WARNING

Risk of explosion!

The plug may only be disconnected from the socket when the truck and battery charger are switched off.

⚠ CAUTION

There is a risk of short circuit if the cables are damaged.

Do not crush the battery cable when closing the battery cover.

- Ensure that the battery cable does not come into contact with the battery cover.

– Close the battery door. When doing so, ensure that no cables are crushed between the chassis and the battery door.

The battery door must be locked in place.

If the truck is equipped with a door contact switch for the battery door (variant), the message `Close battery door` appears on the display of the display/operating unit and the truck will not move.

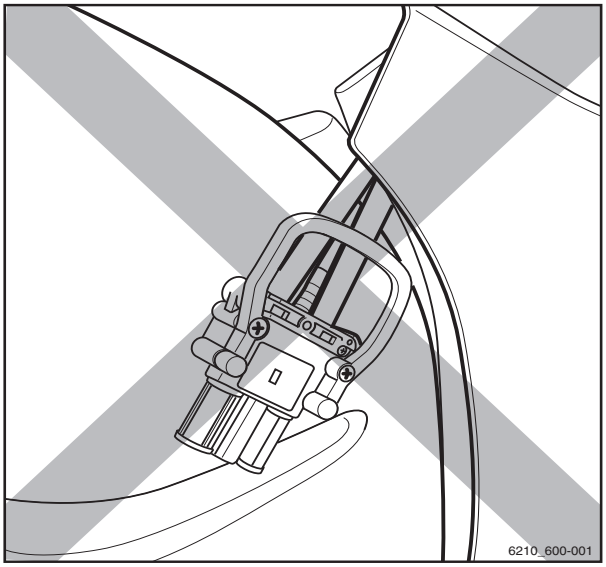

Equalising charging to preserve the battery capacity

Equalising charges ensure that unevenly charged battery cells are evenly charged again. This preserves the service life of the battery and the battery capacity.

An equalising charge should be carried out in accordance with the battery manufacturer's instructions several times a month after the normal charging process.

NOTE

Depending on the battery charger used, the equalising charge may not begin until 24 hours have elapsed. A period when no shifts are running, such as the weekend, is therefore ideal for performing the equalising charge.

– Observe the information in the operating instructions of the battery charger regarding how to perform an equalising charge.

Starting the equalising charge

– Charge the battery.

– After charging, leave the battery in the charger.

The battery charger remains switched on. Depending on the type of battery charger,

the equalising charge begins between 6 and 24 hours after the end of the actual charging process. The equalising charge takes up to 2 hours.

– Please refer to the operating instructions from the manufacturer of the battery charger.

Ending the equalising charge

The equalising charge ends automatically. If the battery is required during this process, you can interrupt the equalising charge by pushing the "stop button" on the battery charger.

– Please refer to the operating instructions from the manufacturer of the battery charger.

⚠ CAUTION

Damage to the connection assembly is possible!

If you disconnect the charging cable while the battery charger is switched on, an arc will be produced. This can lead to erosion at the contacts, which considerably shortens the service life of the contacts.

– Switch off the battery charger before you disconnect the charging cable.

– Switch off the battery charger.

– Disconnect the battery male connector from the plug for the battery charger.

– Insert the battery male connector fully into the plug connection on the truck.

Handling the lithium-ion battery

Safety regulations for handling the lithium-ion battery

First-aid measures

⚠ WARNING

Risk of injury!

Escaping gases can lead to breathing difficulties.

Course of action required if gases or liquids escape

– Immediately ventilate the area or go out into the fresh air; in more serious cases, call a doctor immediately.

Skin irritation can occur in the event of contact with the skin.

– Thoroughly wash the skin with soap and water.

Eye irritation can occur in the event of contact with the eyes.

– Immediately rinse eyes thoroughly with water for 15 minutes, then consult a doctor.

Maintenance personnel

The lithium-ion battery is virtually maintenance-free and can be charged by the driver.

– If you have any questions, please contact your authorised service centre.

– The handling instruction for the battery and the operating instructions for the battery charger must be followed.

– Observe the following safety regulations when maintaining, charging and changing the battery.

WARNING

Risk of crushing/shearing!

The battery is very heavy. There is a risk of serious injury if any parts of the body are caught under the battery.

If parts of the body are wedged between the battery door and the edge of the chassis when the battery door is closed, this could lead to injuries.

- Always wear safety shoes when replacing the battery.
- Only close the battery door if there is no part of the body between the battery door and the edge of the chassis.

The battery must only be replaced in accordance with the directions in these operating instructions.

- When charging and maintaining the battery, observe the manufacturer's maintenance instructions for the battery and battery charger.

Fire protection measures

DANGER

There is a risk of damage, short circuiting and explosion!

- Do not place any metal objects or tools on the battery.
- Keep away from naked flames and do not smoke.

DANGER

Increased risk of fire!

Damaged lithium-ion batteries pose an increased fire hazard.

In the event of a fire, large quantities of water are the best option to cool the battery.

- Evacuate the location of the fire as quickly as possible.
- Ventilate the location of the fire well, as the resulting combustion gases are corrosive if inhaled.

- Inform the fire brigade that lithium-ion batteries are affected by the fire.
- Observe the information provided by the battery manufacturer regarding the procedure in the event of a fire.

Battery weight and dimensions

DANGER

Risk of tipping due to change in battery weight!

The battery weight and dimensions affect the stability of the truck. When replacing the battery, the weight ratios must not be changed. The battery weight must remain within the weight range specified on the nameplate.

- Do not remove or change the position of ballast weights.
- Observe the battery weight.

General safety regulations for lithium-ion batteries

The following safety regulations generally apply to operating lithium-ion batteries.

- Comply with the specifications stated in the safety data sheets of the battery manufacturer.
- Protect the battery against mechanical damage to prevent internal short circuits.
- If batteries have even the slightest external damage, dispose of them in accordance with national regulations for the country in which they are being used.
- Do not expose batteries directly to continuously high temperatures or heat sources, such as direct sunlight.
- Train employees in how to handle lithium-ion batteries correctly.

Lithium-ion batteries "GGS Li-ion 48 V (BG2)" 13.1 kWh and 49 kWh

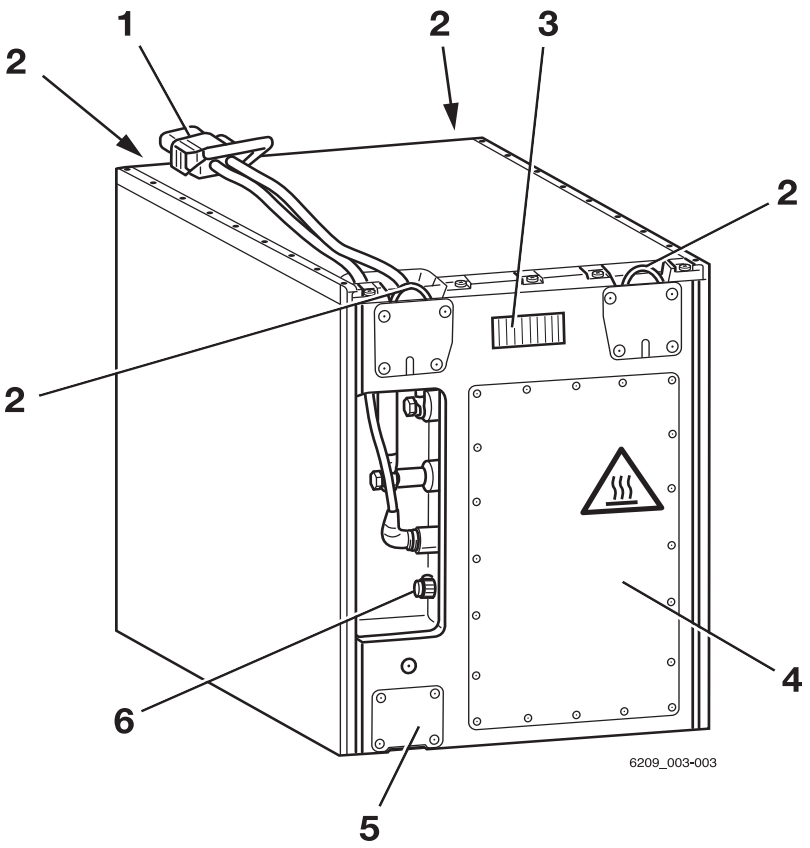

1	Battery male connector	4	Technology compartment
2	Lifting eyes	5	Safety valve
3	Display	6	Diagnostic connector

WARNING

Risk of accident due to weakened lifting eyes.

If bent lifting eyes are straightened, they lose their rigidity. The lifting eyes are then no longer able to support the weight of the battery. The battery may fall.

- **Do not** straighten bent lifting eyes.
- Have bent lifting eyes replaced by the authorised service centre.

NOTE

When switching to lithium-ion batteries, have the truck electronics adapted by the authorised service centre.

Regulations for storing lithium-ion batteries

NOTE

Lithium-ion batteries are classified as dangerous goods according to class 9.

The following recommendations apply:

- Store batteries at a height between 60 cm and 120 cm so that they are not damaged if they fall
- Store the batteries in a segregated area suitable for fire protection (container or safety cabinet)
- Store the batteries at a temperature between +15°C and +30°C and air humidity from 0% to 80%

Observe the following regulations for safe storage of the batteries:

– Store batteries fixed onto pallets and secured against overturning.

– Observe the floor load capacity of the storage area; refer to the manufacturer's specifications regarding battery weight

– To protect batteries against moisture, do not store them directly on the floor

– Due to the fire risk, store batteries outside buildings

– Store in a cool, dry and well-ventilated area

– Never subject the battery to temperatures below -35°C and above 80°C.

Long-term storage below -10°C or above 50°C has a negative impact on the service life of the battery.

– After twelve months, check the charging state of the battery and recharge if necessary

– Cordon off the warehouse area

– Only persons who are aware of the risks and safety regulations may access this area

– Protect against direct sunlight

– Protect against precipitation

Handling the lithium-ion battery

- Store in a way that protects the batteries against short circuits
- Store batteries at a safe distance from flammable materials
- Do not store batteries together with metallic objects
- Store lithium-ion batteries separately from other types of batteries (no mixed storage).
- Maintain a safety margin of at least 2.5 m to other goods
- To avoid a deep discharge, observe the specifications of the battery manufacturer regarding the maximum permissible storage period
- If you have any questions, please contact your authorised service centre.

Checking the battery charge status

The charge state of the lithium-ion battery can be read on the display-operating unit of the truck and on the display of the lithium-ion battery.

Reading the display-operating unit

▷

- Apply the parking brake.
- Switch on the key switch.
- Read the charge state from the display.
- Charge a discharged or partly discharged battery.

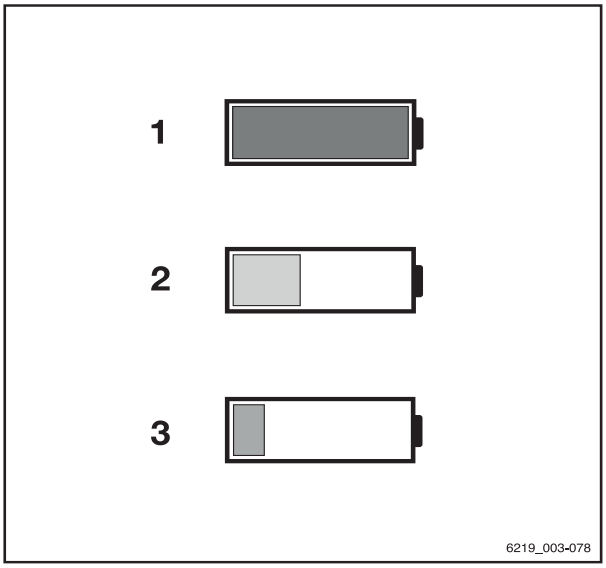

Meaning of the colours in the display

1 Green:
The charge state is > 10%.
The battery is sufficiently charged

2 Yellow:
The charge state is ≤ 10%.
Charge the battery soon.

3 Red:
Stop working. Charge the battery immediately. The battery is at risk of deep discharge.

Reading from the battery indicator

The battery indicator is located at the side of the battery tray. Like the display-operating unit, the battery indicator shows the charge state of the lithium-ion battery. Warnings are issued only on this battery indicator.

– If you have any questions, contact your authorised service centre.

Charging state LEDs

When the battery is connected to the truck and the truck is switched on, the charge state LEDs (3) display the charge state in 10% increments. The charge state LEDs can light up in green and red.

- A charge state of 0% to 20% is indicated by a red bar.

  If this bar flashes, the charge state is < 2%.

  The truck can no longer be moved.
- A charge state of > 20% to 30% is indicated by yellow bars
- A charge state of > 30% to 100% is indicated by green bars

When charging, the charge state LEDs (3) light up green as a chase light.

Service LED

The service LED (1) lights up red if the battery function is significantly restricted or if operation is not possible.

– Contact your authorised service centre.

Temperature LED

The temperature LED (2) indicates an increased temperature. The power of the battery is reduced. The LED remains lit until the temperature drops to within the normal range. The LED goes out as soon as the temperature drops into the normal range.

▷

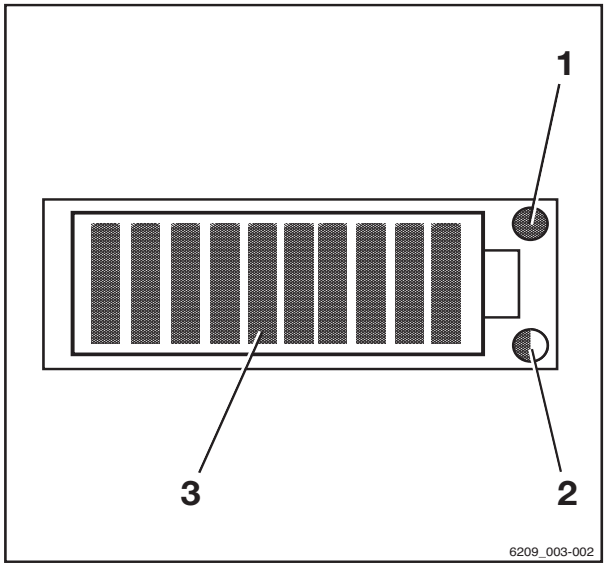

1 Service LED (red)
2 Temperature LED (yellow/red)
3 Charge state LEDs (red/green)

Colour of LED	Cause	Consequence
Flashing yellow	Slightly increased temperature (> 60°C)	Power reduction
Solid yellow	Increased temperature (> 65°C)	Shut-off

Colour of LED	Cause	Consequence
Flashing red	Greatly increased temperature (> 70°C)	Shut-off
Solid red	Greatly increased temperature (> 75°C)	Shut-off

Procedure if a lithium-ion battery has a low charge state

To prevent deep discharge of the lithium-ion battery, performance limitations are imposed once the charge state of the battery is ≤ 10%.

– If the charge state drops below 15%, drive to the charging station and charge the battery.

⚠ WARNING

No electric brake assistance when the battery is switched off!

The drives are de-energised when the battery is automatically switched off.

The truck will not be held on a slope by the electric brake.

– To brake, actuate the service brake.

– If the battery switches off, tow the truck to the charging station.

– Charge the battery.

Charging the lithium-ion battery

⚠ CAUTION

Risk of component damage!

Incorrect connection or incorrect operation of the charging station or battery charger may result in damage to components.

– Follow the operating instructions for the charging station or battery charger and for the battery.

CAUTION

Risk of component damage!

Battery male connectors and battery charger connectors from different manufacturers are not compatible and may cause damage.

- Use battery male connectors and battery charger connectors produced by the same manufacturer.
- If the connectors from produced by different manufacturers, please contact your authorised service centre.

NOTE

To prevent deep discharge of the lithium-ion battery, performance limitations are imposed once the charge state of the battery drops to a certain level. Load the battery before the charge state drops below 15%.

To read the battery charge state; see the section entitled "Checking the battery charge status".

- Park the truck safely.
- Open the battery door completely
- Disconnect the battery male connector.
- Keep away from naked flames and do not smoke.
- Check the battery cable for damage and have it replaced by the authorised service centre if necessary.

DANGER

There is a risk of damage, short circuiting and explosion!

- Do not place any metal objects or tools on the battery.
- Keep away from naked flames and do not smoke.

- Connect the battery male connector to the plug on the battery charger.
- Start the battery charger.

The charging process starts automatically. The display signals the charging process by illuminating the LEDs as a chase light.

The battery charger will indicate when the battery is fully charged. Only disconnect the battery from the charger if no current is flowing.

The battery has no memory effect. Therefore, it can be charged in any charge state without the capacity of the battery being impaired.

At ambient temperatures below 0°C, the charging process will take much longer.

NOTE

Observe the information in the operating instructions for the battery and the battery charger.

The battery door can be locked in the open position using a support bracket.

- Pull the support bracket (1) up and out of its support eyelet (2) on the battery door.
- Swing the support bracket (1) outwards in an anticlockwise direction.
- Press down on the support bracket (1) to clip it into the support eyelet (3) on the truck.

The battery door will lock into a slightly open position.

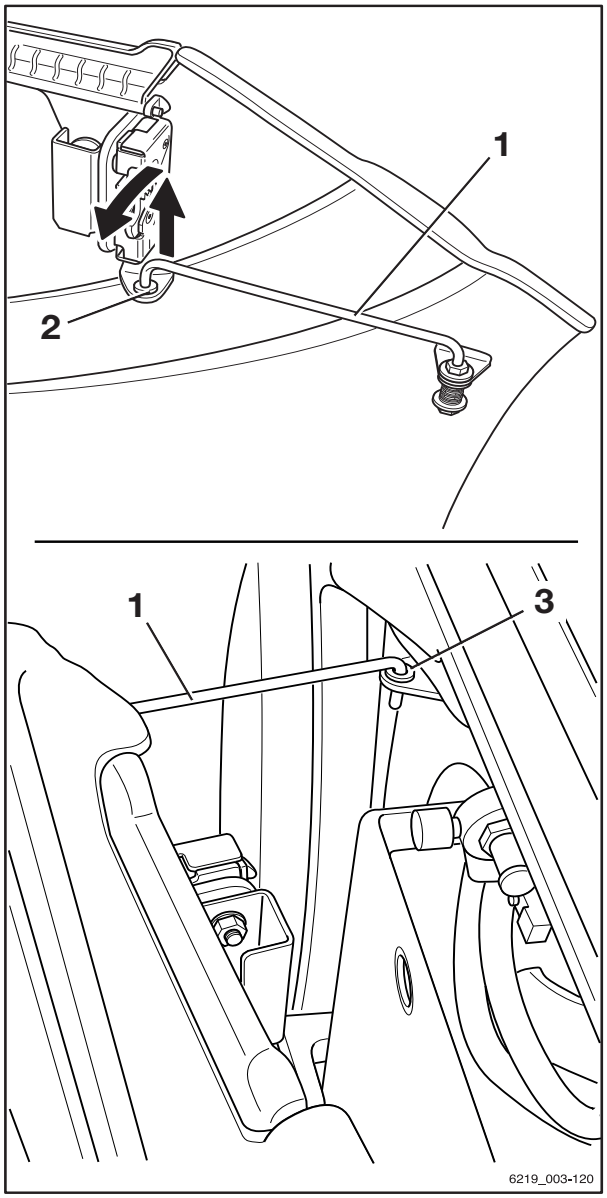

After charging

The battery charger will switch off automatically.

- Swing the support bracket (1) back into position and lock it into the support eyelet (2) on the battery door.
- Open the battery door and lock it into the open position.
- Disconnect the battery male connector from the plug on the battery charger.
- Fully insert the battery male connector into the plug connection on the truck.

⚠ CAUTION

There is a risk of short circuit if the cables are damaged.

Do not crush the charging cable when closing the battery cover.

- Make sure that the charging cable does not come into contact with the battery cover.

– Close the battery door. When doing so, ensure that no cables are crushed between the chassis and the battery door.

The battery door must be locked in place

If the truck is fitted with a door contact switch for the battery door (variant), the message `Close battery door` appears on the display-operating unit. The truck will not move.

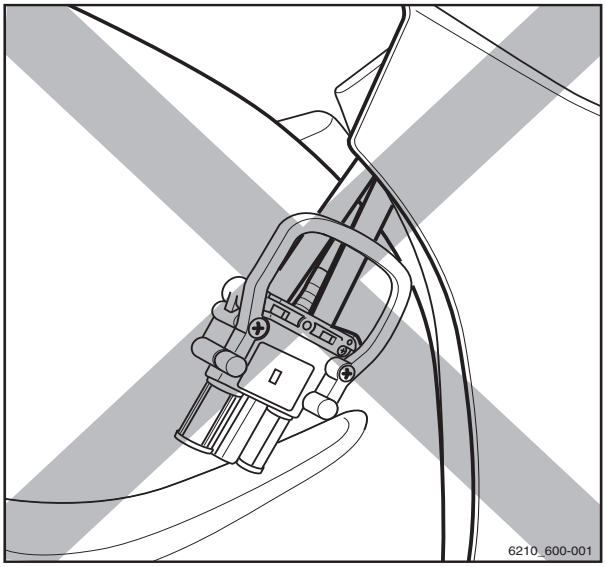

Replacing and transporting the battery

General information on replacing the battery

⚠ CAUTION

Risk of components being damaged by the lifting accessory and battery rolling away!

The lifting accessory and battery may roll away in an uncontrolled manner if the battery is not removed on a level, smooth floor with sufficient load capacity.

– Follow the operating instructions for the lifting accessory used.
– Always remove the battery on a level, smooth floor with sufficient load capacity.

Batteries can be removed with a truck and with a lift truck equipped with a battery change frame. A hydraulic battery carrier is also available as a variant.

The load capacity of the lifting accessory used must at least match the battery weight (see the battery nameplate).

Changing to a different battery type

The authorised service centre can convert the truck to a different battery type and capacity.

Note the following points:

- The new battery capacity and new battery type must be set in the display-operating unit.

  If this is not done, the actual battery discharge status cannot be determined. The battery charge level is not displayed correctly.

  In the worst case, the battery may be damaged by a deep discharge.
- When changing to TENSOR® batteries, the maximum speed of the truck must be limited to 17 km/h for technical reasons.

– Contact the authorised service centre in this situation.

– Only use lithium-ion batteries that have been approved by STILL with this truck.

Converting to lithium-ion batteries

If the truck is fitted with a lead-acid battery at the factory, the truck can be converted to a lithium-ion battery. The conversion must be performed by the authorised service centre.

The authorised service centre adapts the truck electrics so that they will work with the lithium-ion batteries.

This includes:

- The cable harness
- The battery male connector and the plug connection
- Adjusting the display-operating unit

– Only use lithium-ion batteries that have been approved by STILL for use with this truck.

NOTE

The use of lead-acid batteries is only possible after the conversion to lithium-ion batteries if the truck is converted back again.

Opening/closing the battery door

Opening the battery door

– Take hold of the door handle (1) of the battery door and open the battery door by pulling it forwards.

The battery door locks into place automatically.

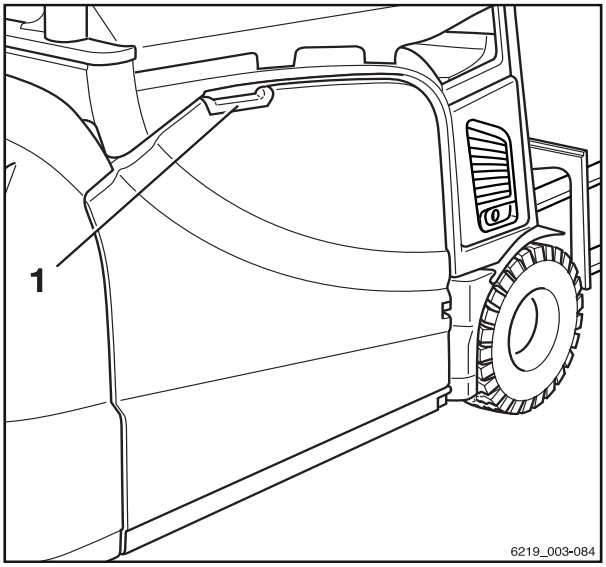

Locking the battery door into a slightly open position

The battery door can be locked in the open position using a support bracket.

- Pull the support bracket (1) up and out of its support eyelet (2) on the battery door.
- Swing the support bracket (1) outwards in an anticlockwise direction.
- Press down on the support bracket (1) to clip it into the support eyelet (3) on the truck.
- To close the support bracket (1), swing it back into position and lock it into the support eyelet (2) on the battery door.

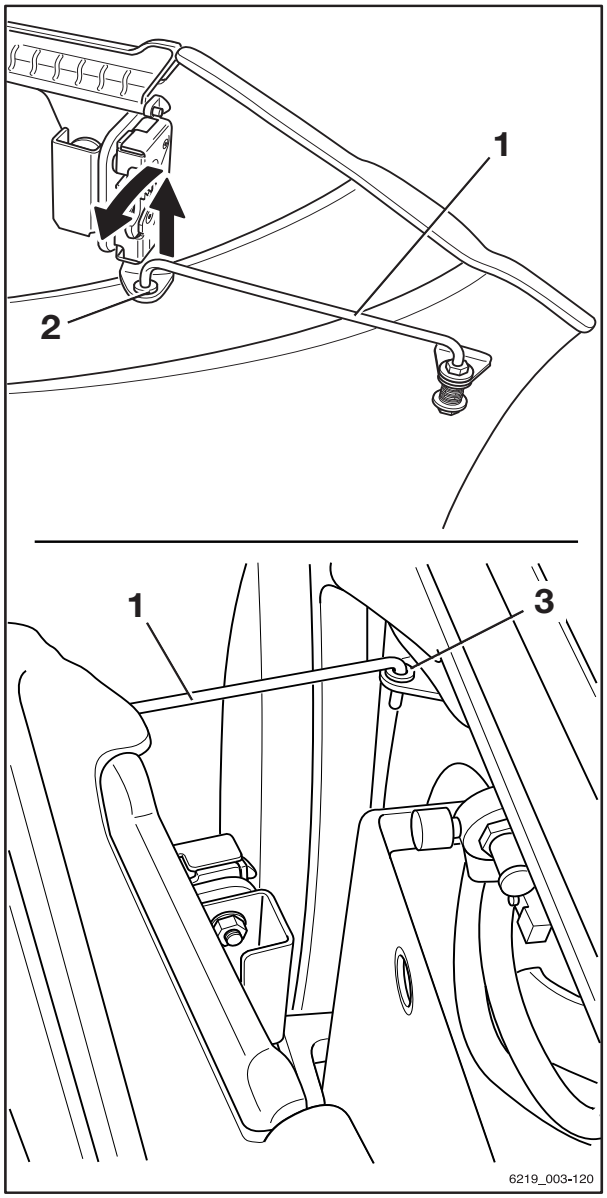

Closing the battery door

WARNING

When closing the battery door, limbs could become trapped — risk of crushing!

When closing the battery door, nothing should come between the battery door and the edge of the chassis.

- Carefully close the battery door.
- Only close the battery door if there are no parts of the body in the way.

WARNING

When closing the battery door, there is a risk of trapping the battery cable. If the cable is crushed or sheared off, there is a risk of short circuit!

When closing the battery door, nothing should come between the battery door and the edge of the chassis.

- Carefully close the battery door.
- Only close the battery door if the battery cable is not in the way.

WARNING

Risk of accident due to the battery door opening!

An unlocked battery door may open if the truck decelerates sharply. If the battery door opens while driving, there is risk of damage from a collision.

– Ensure that the battery door is securely shut.
– Drive the truck only when the battery door is locked.

DANGER

Risk of fatal injury from the battery sliding out!

The battery may fall out if the battery door is not locked and the truck tips over. The battery could fall on the driver!

– Ensure that the battery door is securely shut.
– Drive the truck only when the battery door is locked.

NOTE

The apertures in the door are necessary for forced ventilation and must not be blocked.

– If the battery door is fully open, take hold of the battery door by its handle and open it slightly further.

This will release the latch in the hinge.

– Close the battery door by hand until it engages in the lock.

The battery door must be locked in place

The truck is equipped with a door contact switch for the battery door. If the battery door is not fully closed, the message `Close battery door` appears on the display of the display-operating unit. The truck will then only move at a reduced speed.

Special notes for installing the lithium-ion battery

With the exception of the following special notes, lithium-ion batteries are replaced in the same way as lead-acid batteries.

– Push down the lifting eyes before inserting the battery into the battery compartment. Make sure that the lifting eyes **do not** protrude.

The lifting eyes may bend in the event of a collision with the truck chassis.

– Install the lithium-ion battery with the display facing the outside of the truck so that it can be read when the battery door or battery cover is open.

– Lay the battery cable on the battery. Make sure that the cable does not come into contact with the truck chassis during installation.

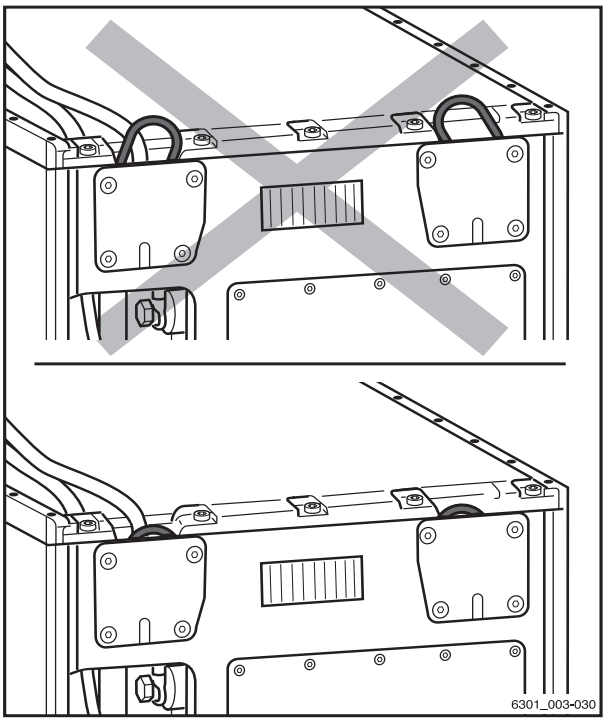

Replacing the battery using a truck

Preparation

⚠ WARNING

Risk of accident!

The load capacity of the truck in use must be at least equal to the battery weight (see the battery nameplate).

– Observe the nameplates of the battery and of the change frame.

– Before picking up the battery, the fork arms must be adjusted to match the opening in the chassis (A). Push the fork arms together, selecting the maximum possible distance.

The fork arms must not be moved under the battery any further than the length of the chassis opening (B = max. 850 mm).

It is useful to mark this measurement (B) (measured from the fork tips) on the fork arms.

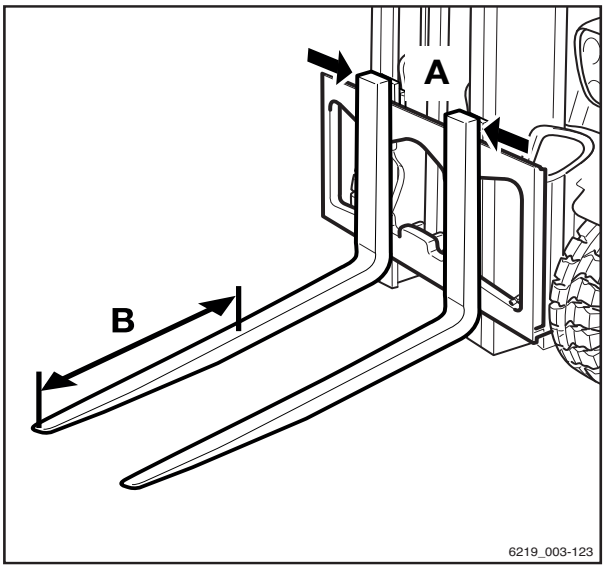

Removing the battery

– Park the truck safely and switch it off.

– Open the battery door.

CAUTION

Potential for damage to the battery male connector!

If the battery male connector is disconnected while the key switch is on (under load), an arc will be produced. This can lead to erosion at the contacts, which considerably shortens the service life of the contacts.

– Switch off the key switch before disconnecting the battery male connector.
– Do not disconnect the battery male connector while the key switch is switched on, except in an emergency.

– Disconnect the battery male connector. ▷

WARNING

Risk of crushing/shearing!

No one must stand directly next to the battery or between the battery and the truck when removing and inserting the battery.

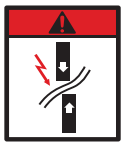

CAUTION

Risk of damage!

– Position the battery cable on the battery in such a way that the cable cannot be crushed either when removing or inserting the battery or when closing the battery door.

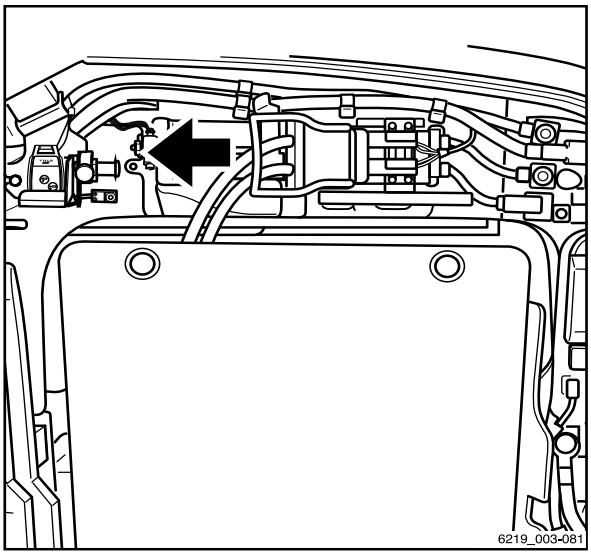

– Open the battery locks (1).

▷

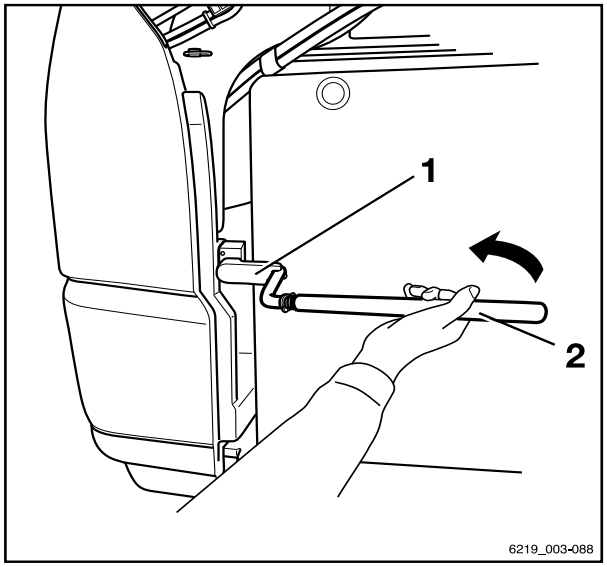

NOTE

If the battery locks cannot be opened by hand, the coupling pin (2) from the counterweight can be used as a lever extension.

– Carefully drive the truck under the battery.

– Carefully lift the battery until it maintains a sufficient distance from the seating and from the chassis above.

– Position the fork arms horizontally.

CAUTION

Potential for damage to the battery!

– If the battery knocks against the chassis above, lower the battery immediately.

– Slowly remove the battery from the battery compartment.

Transporting and setting down the battery

WARNING

Risk of crushing/shearing!

The battery must be transported very carefully, i.e. at a low speed, using a slow steering movement and careful braking.

– Do not use the methods described here to transport the battery over long distances.

– Transport the battery to the intended storage space.

CAUTION

Risk of damage!

The battery must be stored on a suitable beam support or on suitable racking.

The battery must not be stored on a wooden beam or any similar object.

– Set down the battery.

Installing the battery

– Pick up the battery and transport it to the truck.

CAUTION

Risk of component damage!

If the lifting eyes protrude from the lithium-ion battery (variant), they will strike the truck chassis and bend.

– Before inserting the lithium-ion battery (variant), push the lifting eyes down in the tray and make sure that they do **not** protrude.

NOTE

***Do not** straighten any bent lifting eyes. Instead, have them replaced by the authorised service centre.*

– Carefully insert the battery into the battery compartment.

When doing so, ensure that

- Before inserting, the battery cable is positioned on the battery in such a way that it will not become trapped when the battery is inserted
- The load-carrying equipment is at a right angle to the truck
- The gaps are maintained for the entire time that the battery is being inserted, and that the battery is inserted to a sufficient depth,
- the display on the lithium-ion battery (variant) points towards the battery door.

DANGER

Risk of crushing/shearing!

While inserting the battery, avoid putting your hands between the battery and the chassis.

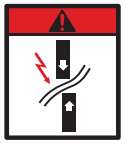

CAUTION

Risk of damage!

– Position the battery cables on the battery in such a way that the cables cannot be crushed either when removing or inserting the battery or when closing the battery door.

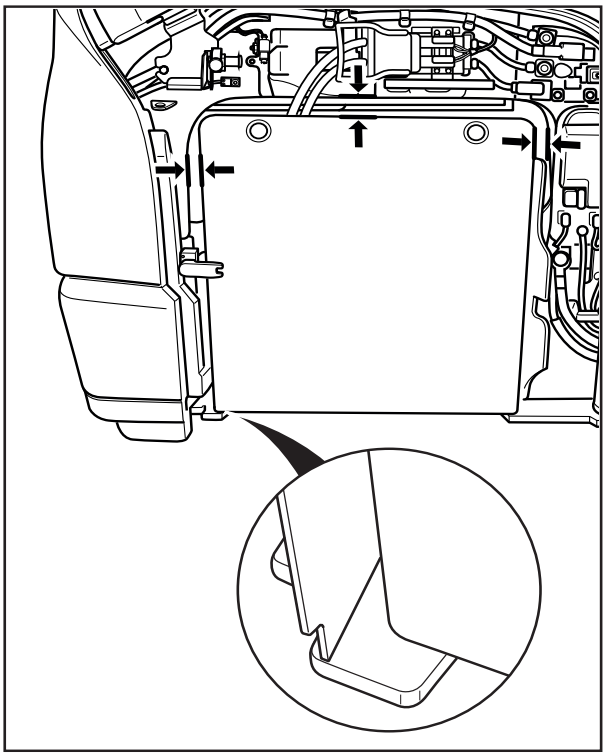

Once the battery is correctly positioned in the battery compartment:

– Carefully lower the battery.

– Carefully move the lifting accessories out from under the battery.

⚠ CAUTION

Potential for damage to the battery male connector!

If the battery male connector is connected while the key switch is on (under load), a jump spark will be produced. This jump spark can damage the contacts and considerably shorten the service life of the contacts.

– Do not connect the battery male connector with the key switch switched on.

– Make sure that the key switch is switched off before connecting the battery male connector.

– Close the battery lock (1). ▷

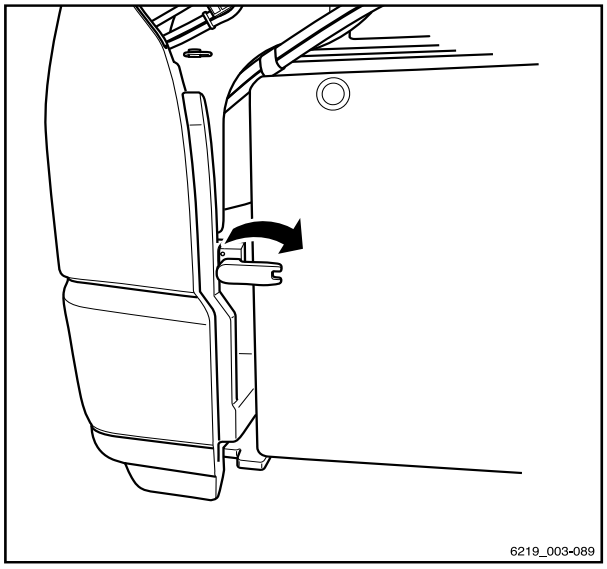

NOTE

The battery door will close only when the battery is locked.

- Insert the battery male connector fully into the plug connection on the truck. ▷
- Close the battery door.

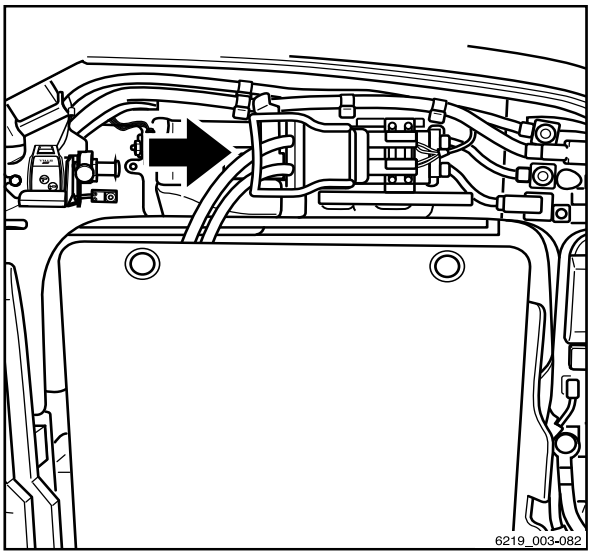

Replacing the battery using a lift truck and a battery change frame

WARNING

Risk of accident due to overloading the lift truck!

The load capacity of the lift truck used must be at least equal to the weight of the battery and the weight of the change frame.

– Observe the nameplates of the battery and of the change frame.

CAUTION

Potential for damage to the battery!

– Only position the battery change frame and the battery on a firm surface with sufficient load-bearing capacity.
– **Do not** place the battery change frame and battery on a soft surface or in a rack.

Battery replacement using a lift truck is carried out using change frames. The battery remains on the change frame for charging and storage.

Preparation

– Check the nameplate (3) on the change frame to ensure that the selected change frame has the required load capacity.
– Check the change frame for deformation and breaks or cracks.

Faulty change frames must not be used. They must be replaced by the authorised service centre.

The distance between the feet (6) can be adjusted to ensure that the change frame picks up the battery precisely.

– To adjust the feet (6), loosen the mounting (5).
– Adjust the feet (6) of the change frame according to the dimensions of the fork arms.
– Retighten the mounting (5).

The side stop (1) must also be adjusted.

– To adjust the side stop (1), loosen the mounting (2).

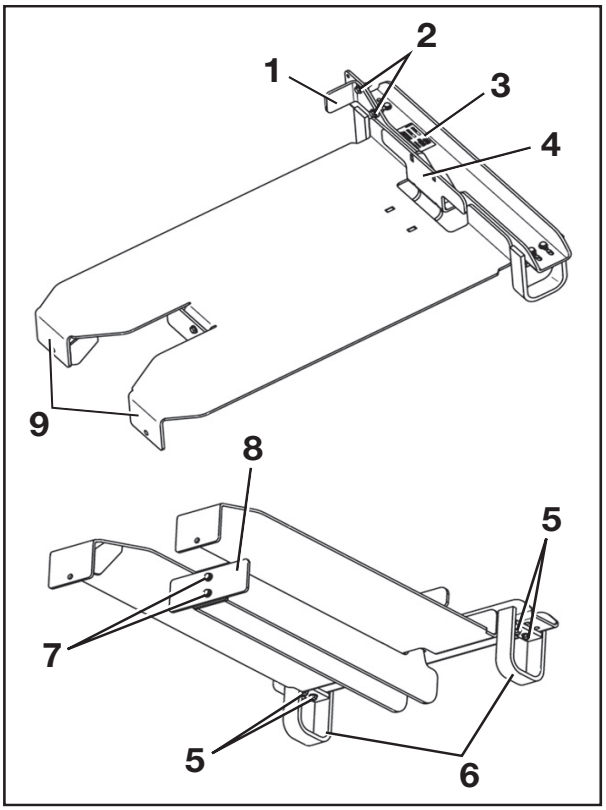

– Adjust the stop (1) so that the battery will later be centred on the change frame.

NOTE

To pick up batteries with large trays, fasten the side stop in the outer bores.

- *Lithium-ion battery, e.g. tray 511*
- *Lead-acid battery, e.g. tray 366*

The battery must lie against the side stop (1) and against the stops (3).

– Retighten the mounting (2).

– Position the change frame properly on the lift truck until the fork arm tips are touching the feet (9).

When the change frame is on the lift truck, the feet (5, 9) must be positioned close to the fork arms on both sides.

NOTE

When using narrow pallet trucks with a distance of 400 mm between the outer edges of the fork arms, the stop (8) must be removed. When using pallet trucks with a distance of ≥ 525 mm between the outer edges of the fork arms, the stop must be installed. The stop (8) is connected to the battery change frame via the mounting (7).

Types of change frames

– Observe the nameplate of the change frame.

The following information is listed on the nameplate:

1 The type of change frame (observe the following table)

2 Maximum permissible load capacity (see the nameplate on the battery)

3 The net weight of the change frame

The various battery change frames that are available are designed for specific types of battery.

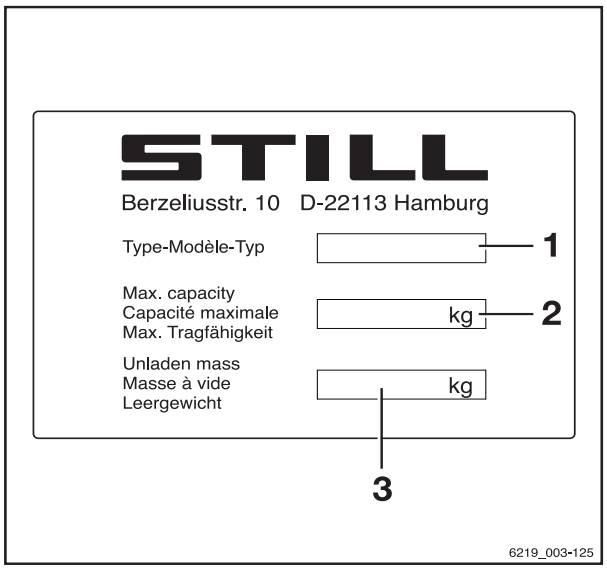

Nameplate of the change frame

NOTE

Battery replacement using a hand pallet truck is allowed only if using the change frame permitted for this purpose.

– For permitted combinations, observe and comply with the following table.

Tray	Battery type	Battery change frame
315	Lead-acid battery, circuit B	56364206701
364	Lead-acid battery, circuit A	
500	Lithium-ion battery, 13.1 kWh (BG 2.1)	
501	Lithium-ion battery, 49.0 kWh (BG 2.2)	
365	Lead-acid battery, circuit A	56364206708
366		
510	Lithium-ion battery, 16.3 kWh (BG 8.1)	
	Lithium-ion battery, 16.3 kWh (BG 8.2)	
511	Lithium-ion battery, 16.3 kWh (BG 9.1)	
	Lithium-ion battery, 49.0 kWh (BG 9.2)	

Removing the battery

– Park the truck securely.

– Open the battery door.

⚠ CAUTION

Potential for damage to the battery male connector!

If the battery male connector is disconnected while the key switch is on (under load), an arc will be produced. This can lead to erosion at the contacts, which considerably shortens the service life of the contacts.

- Switch off the key switch before disconnecting the battery male connector.
- Do not disconnect the battery male connector while the key switch is switched on, except in an emergency.

- Disconnect the battery male connector. ▷

⚠ WARNING

Risk of crushing/shearing!

No one must stand directly beside the battery or between the battery and the lift truck when removing or inserting the battery.

⚠ CAUTION

Potential for damage to the battery cable!

- Position the battery cable on the battery in such a way that it cannot be crushed either when removing or inserting the battery or when closing the battery door.

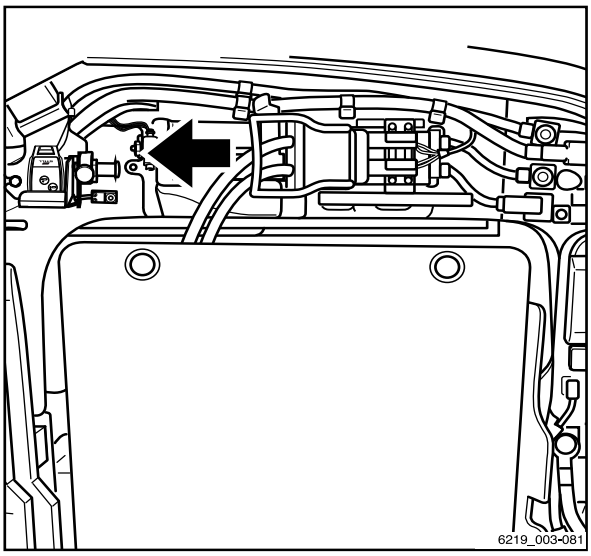

- Open the battery lock (1). ▷

NOTE

If the battery lock cannot be opened by hand, the coupling pin (2) from the counterweight can be used as a lever extension.

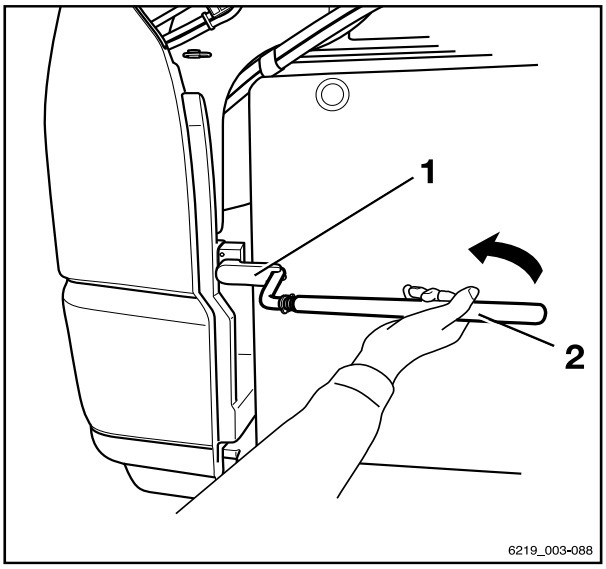

– Carefully drive the lift truck under the battery until the battery touches the stops (1) and (2). ▷

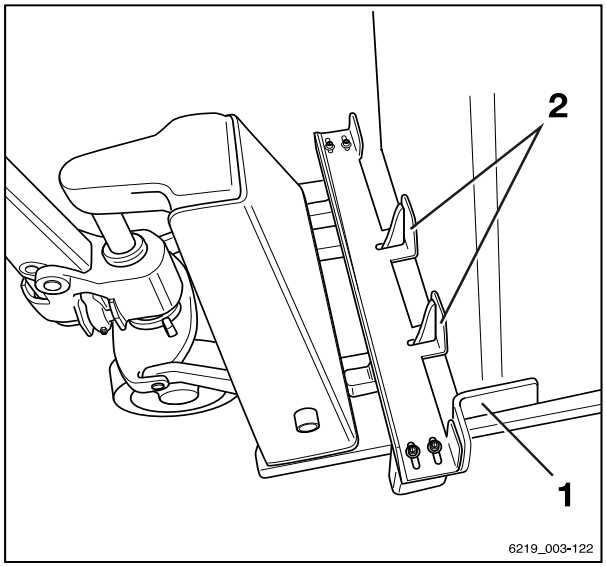

– Carefully lift the battery until it is a sufficient distance from the surface and from the chassis at the top.

⚠ CAUTION

Potential for damage to the battery!

– If the battery knocks against the chassis at the top, lower the battery immediately.

– Slowly remove the battery from the battery compartment.

Transporting and setting down the battery

⚠ WARNING

Risk of injury when transporting the battery!

The battery must be transported very carefully, i.e. at a low speed, using a slow steering movement and careful braking.

– Do **not** use the methods described here to transport the battery over long distances.

– Transport the battery to the intended storage space.

⚠ CAUTION

Potential for damage to the battery!

The change frame and battery must be stored on a suitable beam support or on suitable racking.

The change frame must not be stored on a wooden beam or any similar object.

– Set down the battery.

Installing the battery

- Pick up the battery and transport it to the truck.
- Position the battery cable on the battery so that it will not become trapped when the battery is inserted.
- Position the battery at a right angle to the truck.

CAUTION

Potential for damage to the battery!

If the lifting eyes protrude from the lithium-ion battery (variant), they will strike the truck chassis and bend.

- Before inserting the lithium-ion battery (variant), push the lifting eyes down in the tray and make sure that they do **not** protrude.

NOTE

Do not straighten any bent lifting eyes. Instead, have them replaced by the authorised service centre.

- Carefully insert the battery into the battery compartment.
- Carefully place the battery onto the battery holding fixtures.

DANGER

Risk of crushing/shearing!

When inserting, do not allow your hands to come between the battery and the chassis.

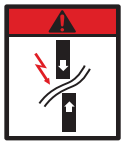

CAUTION

Potential for damage to the battery cable!

- Position the battery cable on the battery in such a way that it cannot be crushed either when removing or inserting the battery or when closing the battery door.

- Once the battery is correctly positioned in the battery compartment, carefully lower the battery.

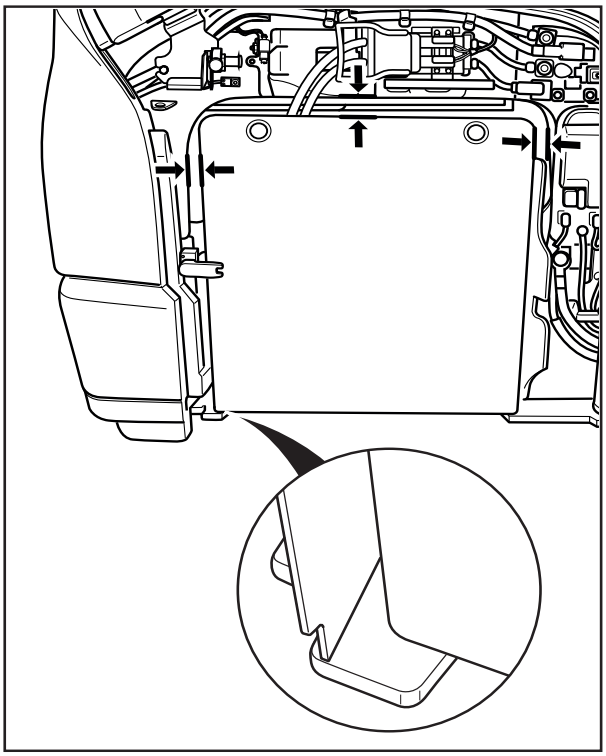

– Carefully move the lifting accessory out from under the battery.

– Close the battery lock. ▷

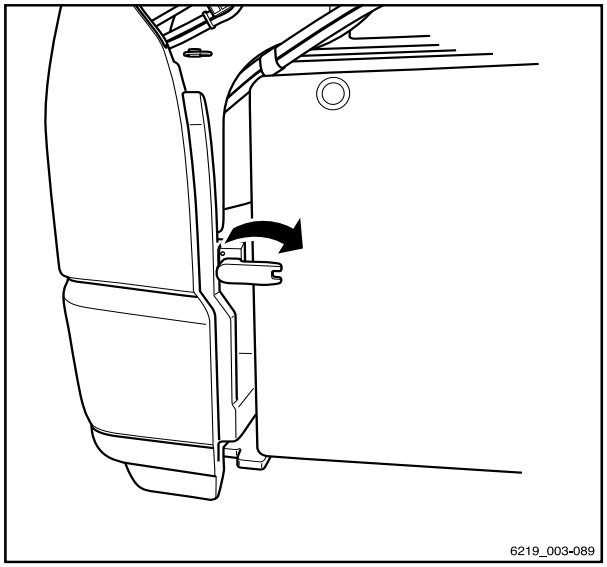

– Insert the battery male connector fully into the plug connection on the truck. ▷

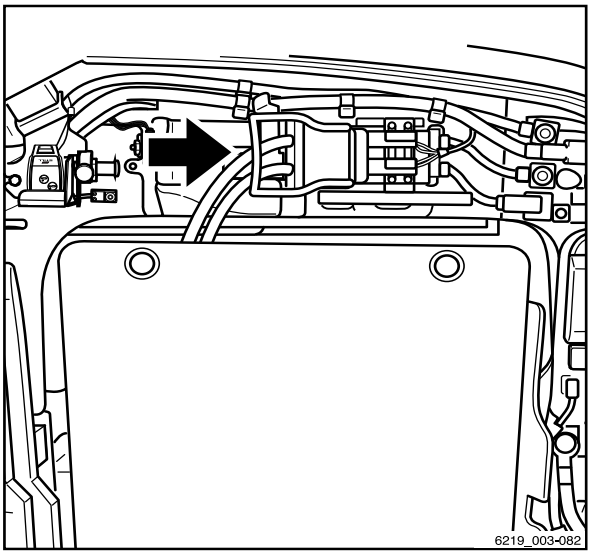

⚠ CAUTION

Potential for damage to the battery male connector!

If the battery male connector is connected while the key switch is switched on or while the battery charger is under load, a transition spark will be produced at the battery male connector. This can lead to erosion of the contacts and can considerably shorten the service life of the contacts.

– Switch off the truck and the battery charger before connecting the battery male connector.

– Close the battery door.

Replacing the battery using a hydraulic battery carrier (variant)

DANGER

The battery weight and dimensions affect the stability of the truck.

When replacing the battery, the weight ratios must not be changed. The battery weight must remain within the weight range specified on the nameplate. The location of ballast weights must not be changed.

Preconditions

WARNING

Risk of injury when ejecting the battery.

The battery is ejected into the marked area (1). People must not stand in this area.

The area (1) extends over the width of the battery compartment and the extension range of the battery carrier.

– Only stand in the operator's position (2).

The following prerequisites must be fulfilled when replacing a battery using a hydraulic battery carrier:

- The extension area (1) must be free of obstacles.
- The ground must clean, even and offer sufficient load capacity.
- The fork must be safely set down on the ground
- The parking brake must be applied
- The operator must be in the operator's position (2).
- The battery cable must be long enough to connect to the plug connection of the battery carrier without being stretched.

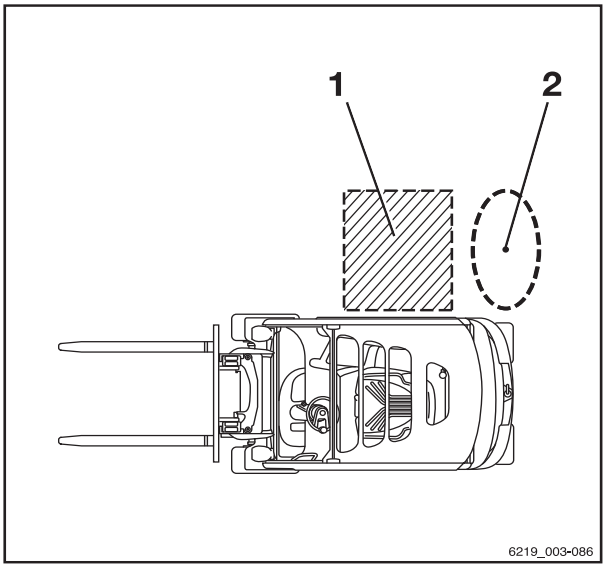

NOTE

When the battery is deeply discharged (less than 10% capacity), it cannot be removed. In this case, a reserve battery must be connected or the battery in the truck must be charged.

Emergency off function when moving the battery ▷

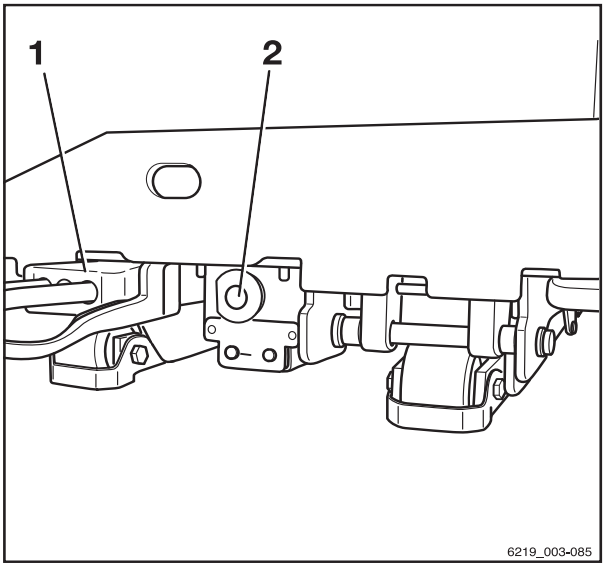

The emergency off switch (2) is located on the carriage next to the connection for the battery male connector (1).

– In the event of an emergency, actuate the emergency off switch (2) or disconnect the battery male connector (1).

Ejecting the battery hydraulically

– Open the battery door.

⚠ WARNING

Risk of injury!

– Open the battery door until the door lock engages and the door cannot close itself.

⚠ CAUTION

Risk of component damage!

When extending the carriage, the battery cable may collide with components and become damaged.

– Ensure that the battery cable does not become stuck or crushed.
– In the event of a malfunction, release the extension button and correct the malfunction.

– (A) Remove the lid of the battery male connector and store it safely. ▷

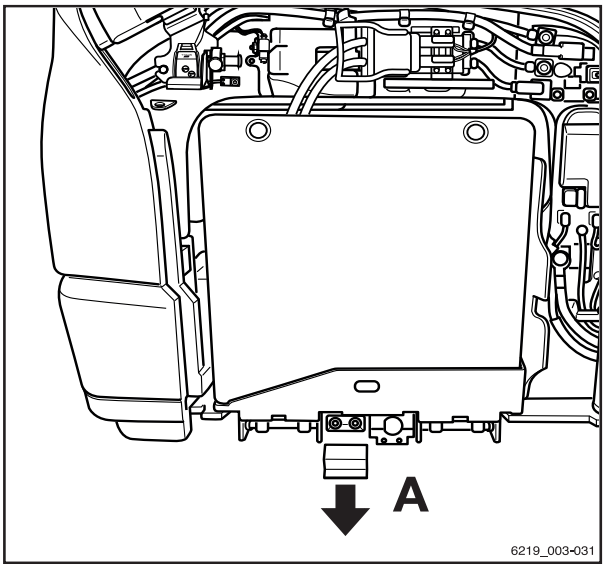

– (B) Disconnect the battery male connector from the plug connection of the truck.

– (C) Insert the battery male connector into the plug connection of the battery carrier.

The condition display on the carrier lights up green. The carrier is ready for use.

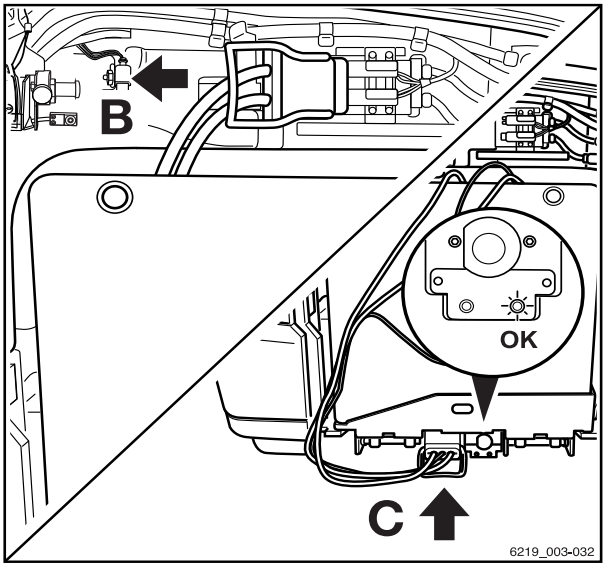

– (D) Remove and pull out the remote control.

The remote control is attached to an extractable cable to prevent loss.

The operation must be carried out outside the extension area.

– (E) Push and hold the extend button.

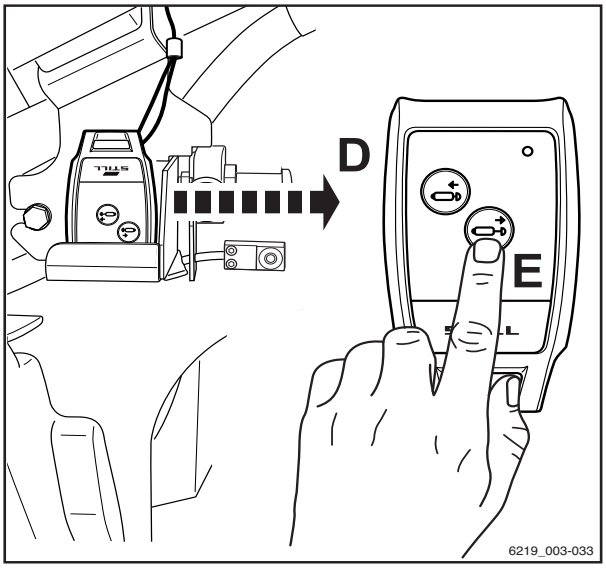

The rollers of the carrier lower and lift the carrier. ▷

The condition display on the carrier now lights up red.

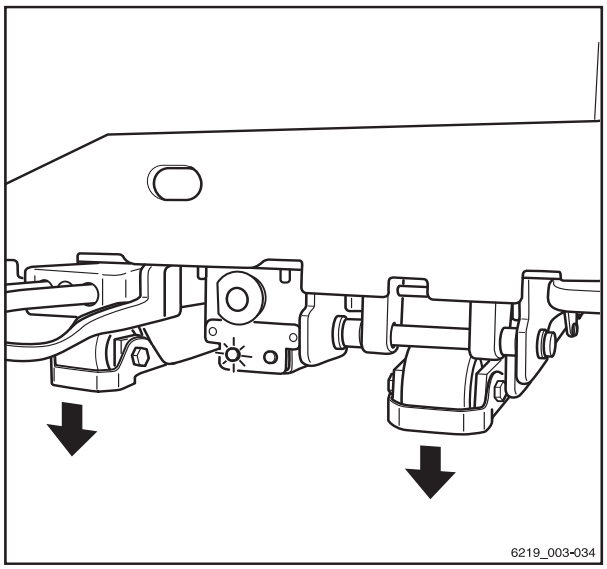

– (G) Extend the carrier until the carriage has reached its end position (F). ▷

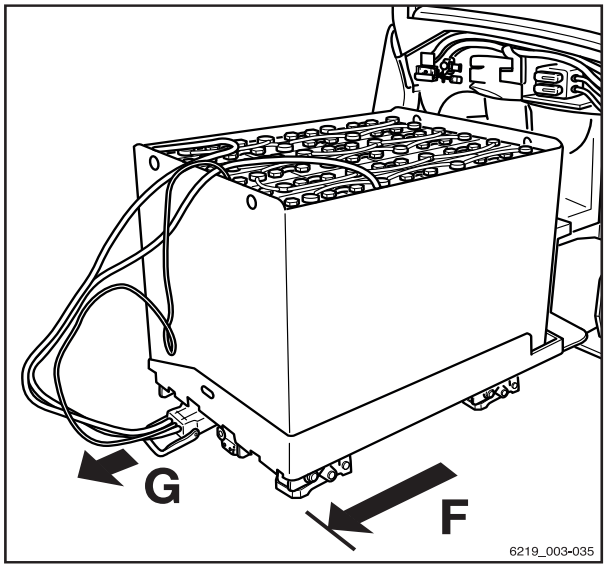

⚠ WARNING

Risk of crushing!

Never reach under the battery to remove obstacles.

– Reinsert battery and remove obstacle.

– Ensure that the battery cable is not damaged when the carriage is extended.

After extending the battery fully

– To prevent short circuits, place a rubber mat on any batteries that have open terminals or connectors.

– Disconnect the battery male connector from the plug connection of the carrier and place it safely on the battery.

- (H) Remove the battery from the carrier using suitable lifting gear. For more information see the "Transporting the battery by crane" section.
- To prevent damage to the truck when the crane is used, ensure that the truck is parked at a sufficient distance from any obstacles.
- (I) Position a charged battery securely on the carrier.
- Make sure that the battery does not protrude beyond the contours of the carrier.

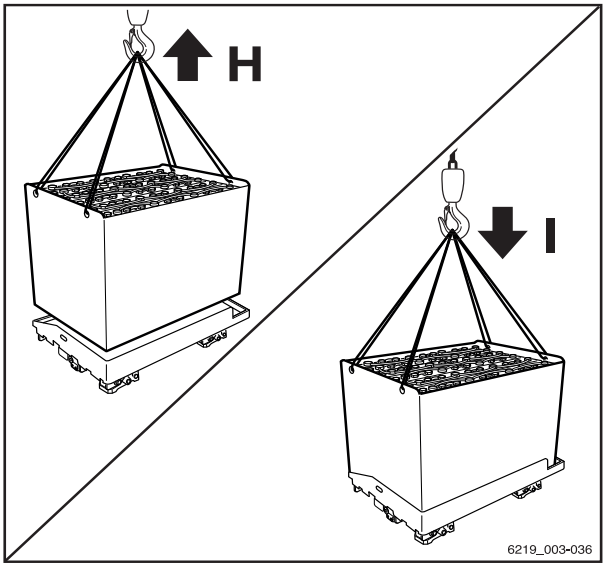

Inserting the battery

⚠ CAUTION

Potential for damage to the battery male connector!

If the battery male connector is connected while the key switch is on (under load), a jump spark will be produced. This jump spark can damage the contacts and considerably shorten the service life of the contacts.

- Do not connect the battery male connector with the key switch switched on.
- Make sure that the key switch is switched off before connecting the battery male connector.

- (J) Insert the battery male connector into the plug connection of the battery carrier.
- (K) Push and hold the retract button.

The battery carrier retracts.

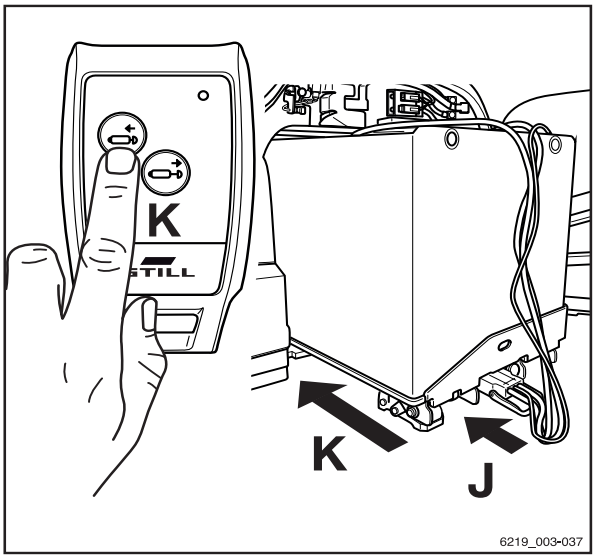

⚠ WARNING

Risk of crushing!

Never reach under the battery to remove obstacles.

- Extend the carriage again.
- Lift the battery again using the crane, swivel the battery to the side and remove the obstacle.

NOTE

If the movement of the carriage is restricted by obstacles, release the push button.

– (L) After inserting, return the remote control to its holder. ▷

The condition display on the carrier lights up green.

– (M) Disconnect the battery male connector from the plug connection of the carrier.

– Refit the lid on the plug connection of the carrier.

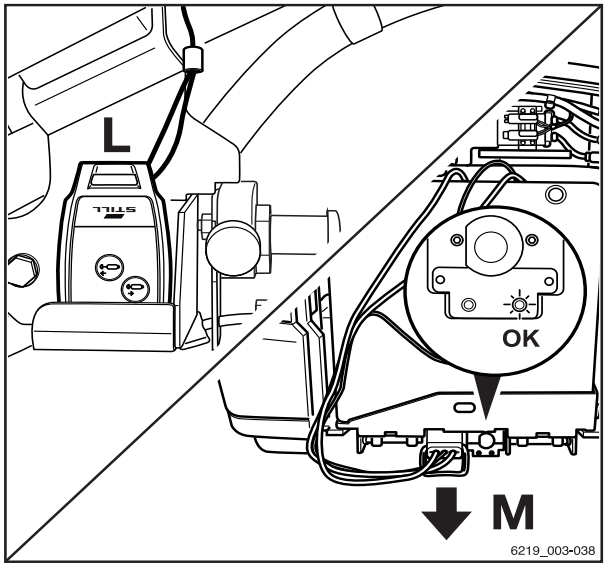

– (N) Insert the battery male connector into the plug connection of the truck. ▷

– (O) Refit the lid of the battery male connector.

– Close the battery door.

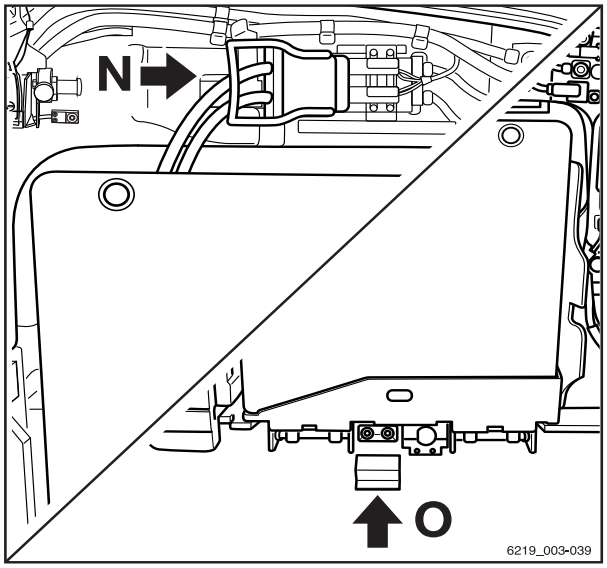

Transporting the lead-acid battery by crane ▷

DANGER

There is risk of fatal injury from being struck by falling loads!

– Never walk or stand underneath suspended loads.

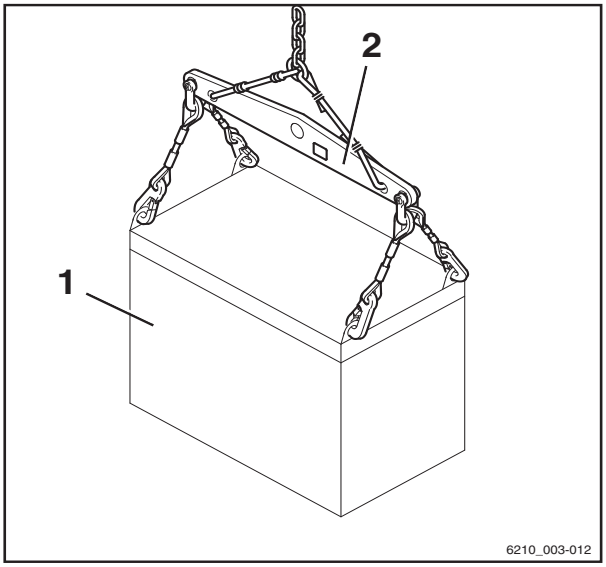

The tray for the lead-acid battery (1) is equipped with four lifting eyes. The battery may only be transported by crane using a lifting gear and bridge piece (2) that are suitable in terms in size and load capacity.

– To avoid short circuits, cover batteries with open terminals or connectors with a rubber mat.

– Observe the operating instructions for the lifting gear.

– Attach the battery (1) to suitable lifting gear (2).

– Lift the battery carefully and ensure that it hangs straight on the lifting gear.

The lifting gear must be vertical when lifting, so that no lateral pressure is applied to the tray.

– Set the battery down carefully.

– Remove the lifting gear after the battery has been set down.

– Do not place slack lifting gear on the battery cells or allow it to fall on the battery cells.

Transporting the lithium-ion battery by crane

DANGER

There is risk of fatal injury from being struck by falling loads!

– Never walk or stand underneath suspended loads.

WARNING

Risk of accident due to weakened lifting eyes.

If bent lifting eyes are straightened, they lose their rigidity. The lifting eyes are then no longer able to support the weight of the battery. The battery may fall.

– **Do not** straighten bent lifting eyes.

– Have bent lifting eyes replaced by the authorised service centre.

The lithium-ion battery (1) is equipped with four extendable lifting eyes. The battery may only be transported by crane using a lifting gear and bridge piece (2) that are suitable in terms in size and load capacity.

– Pull out the two lifting eyes (1) on each side and tilt them towards each other.

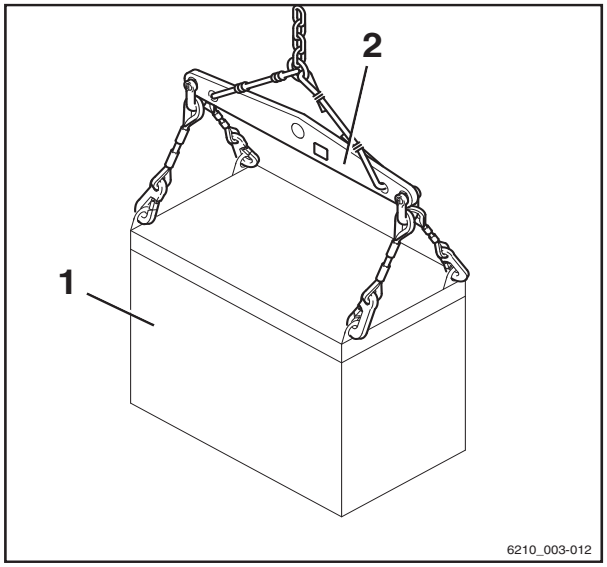

The lifting eyes are locked in this position.

– Observe the operating instructions for the lifting gear.

– Attach the lifting gear to the four lifting eyes.

– Lift the battery carefully and ensure that it hangs straight on the lifting gear.

The lifting gear must be vertical when lifting, so that no lateral pressure is applied to the tray.

– Set the battery down carefully.

– Remove the lifting gear after the battery has been set down. Lift up and release the lifting eyes to lower them.

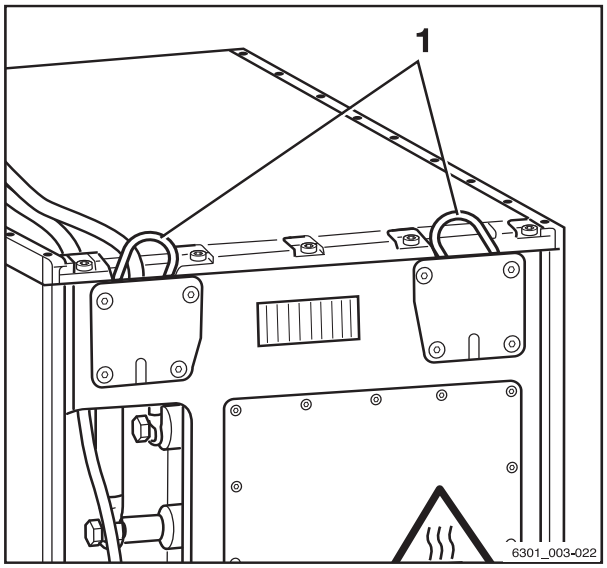

Cleaning the truck

Cleaning the truck

WARNING

Risk of injury from falling off the truck!

When climbing onto the truck, there is a risk of getting stuck or slipping and falling. Use suitable equipment to reach higher points on the truck.

– Use only the steps provided to climb onto the truck.
– Use equipment such as stepladders or platforms to reach inaccessible areas.

WARNING

Risk of fire due to flammable cleaning materials!

Flammable cleaning materials can be ignited by hot components.

– Do not use any flammable cleaning materials.

CAUTION

Risk of fire due to flammable materials!

Deposits and solids can be ignited by hot components, e.g. drive units.

– Remove deposits and solids.

CAUTION

Risk of damage to the battery male connector when disconnecting!

If the battery male connector is disconnected while the key switch is switched on under load, an arc will be produced. The arc can damage the contacts and considerably shorten the service life of the contacts.

– Switch off the key switch.
– Only disconnect the battery male connector while the key switch is switched off.

CAUTION

If water penetrates the electrical system, there is a risk of short circuit!

– Adhere strictly to the following steps.

⚠ CAUTION

Excessive water pressure or water and steam that are too hot can damage truck components.

– Adhere strictly to the following steps.

⚠ CAUTION

Abrasive cleaning materials can damage the surfaces of components!

Using abrasive cleaning materials that are unsuitable for plastics can cause plastic parts to dissolve or become brittle. The screen on the display-operating unit could become cloudy.

– Adhere strictly to the following steps.

– Park the truck safely.

– Switch off the key switch.

– Disconnect the battery male connector.

– Do not spray electric motors and other electrical components or their covers directly with water.

– Use only high-pressure cleaners with a maximum output power of up to 50 bar and 85°C.

– If a high-pressure cleaner is used, maintain a distance of at least 20 cm between the nozzle and the object being cleaned.

– Do not aim the cleaning jet directly at adhesive labels or decal information.

– Remove all deposits and accumulations of foreign materials in the vicinity of hot components.

– Use only non-flammable fluids for cleaning.

– Note the manufacturer's guidelines for working with cleaning materials.

– Clean plastics only with cleaning materials intended for plastics.

– Note the manufacturer's guidelines for working with cleaning materials.

– Clean the truck exterior using water-soluble cleaning materials and water. Cleaning with a water jet, a sponge or a cloth is recommended.

– Clean all accessible areas.

– Before lubrication, clean the oil filling openings and the area around the oil filling openings, as well as the lubricating nipples.

Cleaning the electrical system

⚠ WARNING

Danger of electric shocks due to residual capacity!

– Never reach into the electrical system with your bare hands.

⚠ CAUTION

Cleaning electrical system parts with water can damage the electrical system.

Cleaning electrical system parts with water is forbidden!

– Do not remove covers etc.
– Only use dry cleaning materials according to the specifications in the section "Cleaning the truck".

The components of the electrical system are fitted underneath the cover sheet of the counterweight etc.

– Clean the electrical system parts with a metal-free brush and blow the dust off with low-pressure compressed air.

Cleaning load chains

▷

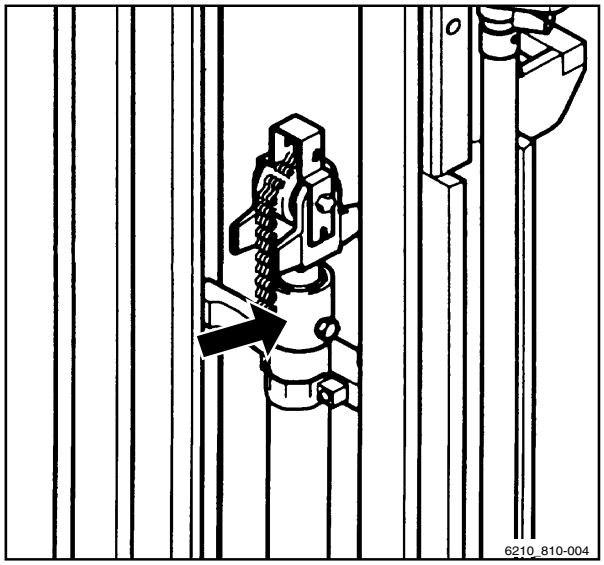

⚠ WARNING

Risk of accident!

Load chains are safety elements.

The use of cold/chemical cleaners or fluids that are corrosive or contain acid or chlorine can damage the chains and is forbidden!

– Observe the manufacturer's guidelines for working with cleaning materials.

– Place a collection vessel under the lift mast.

– Clean with paraffin derivatives, such as benzine.

– When using a steam jet, do not use additional cleaning agents.

– Remove any water in the chain links using compressed air immediately after cleaning. Move the chain several times during this procedure.

– Immediately after drying the chain, spray it with chain spray. Move the chain several times during this procedure.

For chain spray specifications, see the "Maintenance data table" chapter.

ENVIRONMENT NOTE

Dispose of any fluid that has been spilled or collected in the collection vessel in an environmentally friendly manner. Follow the statutory regulations.

Cleaning the windows

Any glass, for example cab windows (variant), must always be kept clean and free of ice. This is the only means of guaranteeing good visibility.

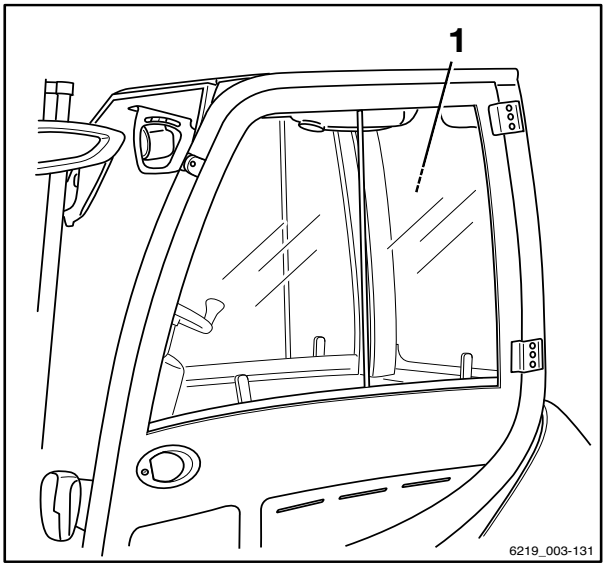

⚠ CAUTION

Do not damage the rear window heating (inside).

– Take great care when cleaning the rear window (1) and do not use any objects with sharp edges.

– Clean the windows with a soft cloth and commercial window cleaner.

After cleaning

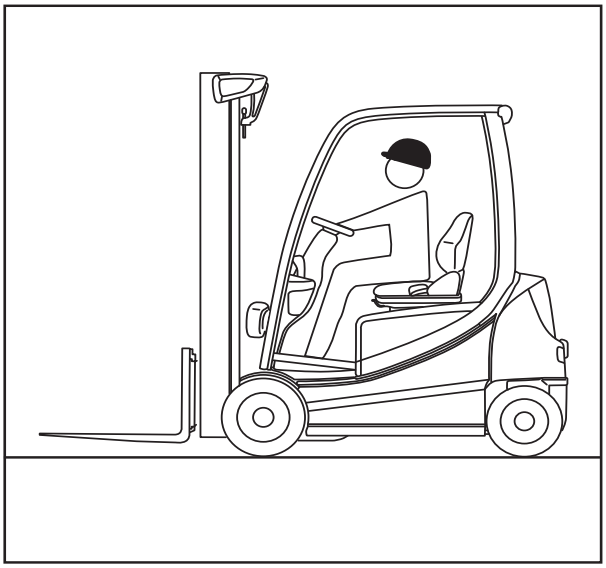

⚠ CAUTION

Risk of short circuit!

Ingress of moisture or dirt into the battery male connector and plug connection can lead to an electrical short circuit.

– Use compressed air to dry the battery male connector and the plug connection before connecting them.

– Use compressed air to remove any foreign objects that may be lodged in the battery male connector and the plug connection.

– Carefully dry the truck, e.g. using compressed air.

– Lubricate the joints and actuators.

– Lubricate the truck according to the "lubrication plan".

NOTE

The more often the truck is cleaned, the more frequently the truck must be lubricated.

Transporting the truck

Transport

⚠ CAUTION

Risk of material damage from overloading!

If the truck is driven onto a means of transport, the load capacity of the means of transport, ramps and loading bridges must be greater than the total actual weight of the truck. Components can be permanently deformed or damaged due to overloading.

- Determine the total actual weight of the truck.
- Only load the truck if the load capacity/lifting capacity of the means of transport, ramps and loading bridges is greater than the total actual weight of the truck.

Determining the total actual weight

- Park the truck securely.
- Determine the unit weights by reading the truck nameplate and, if necessary, the attachment nameplate (variant).
- Add together the determined unit weights to obtain the total actual weight of the truck:

  Tare weight (1)

  \+ Max. permissible battery weight (2)

  \+ Ballast weight (variant) (3)

  \+ Net weight of attachment (variant)

  \+ 100 kg allowance for driver

  = Total actual weight

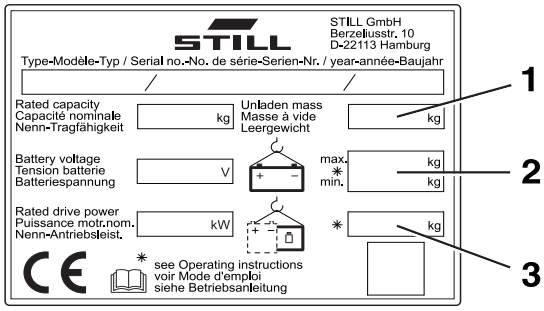

6219_003-040

DANGER

Risk of accident from the truck falling!

Steering movements can cause the rear of the truck to veer off the loading bridge towards the edge. This may cause the truck to crash.

- Before driving across a loading bridge, ensure that the loading bridge is properly attached and secured.
- Ensure that the transport vehicle onto which the truck is to be driven has been sufficiently secured to prevent it from shifting.
- Maintain a safe distance from edges, loading bridges, ramps, working platforms etc.
- Drive slowly and carefully onto the transport vehicle.

Wedging the wheels

- Park the truck securely.
- Secure the truck against rolling away by placing a wedge (1) in front of each front wheel and behind each back wheel.

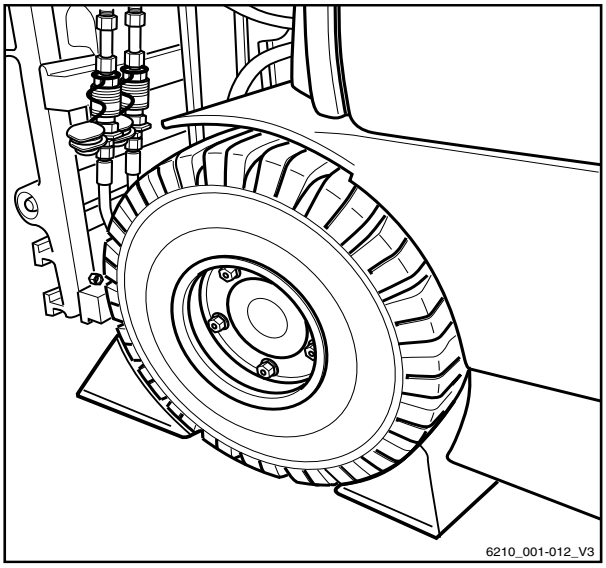

CAUTION

Potential for damage to the battery male connector!

If the battery male connector is disconnected while the key switch is on (under load), an arc will be produced. This can lead to erosion at the contacts, which considerably shortens the service life of the contacts.

- Switch off the key switch before disconnecting the battery male connector.
- Do not disconnect the battery male connector while the key switch is switched on, except in an emergency.

- Ensure that the key switch is switched off.
- Disconnect the battery male connector.

NOTE

If the electric parking brake (variant) cannot be triggered electrically, it must be applied manually; see the section entitled "Manual operation of the electric parking brake".

Lashing down

⚠ CAUTION

Abrasive lashing straps/tension belts can rub against the surface of the truck and cause damage.

– Position slip-resistant pads (e.g. rubber mats or foam) underneath the lifting points.

– Hook the lashing straps/tension belts onto both sides of the curves in the mudguard and lash the truck towards the rear. ▷

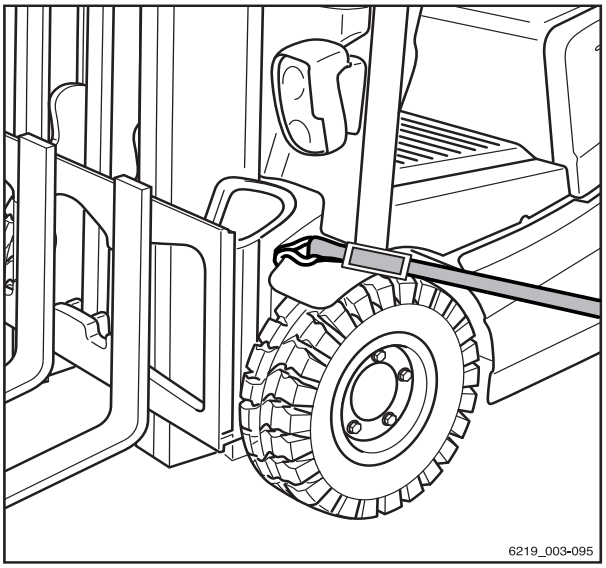

– Position the lashing straps/tension belts for the coupling pin around the coupling pin as shown and lash the truck at an angle towards the front. ▷

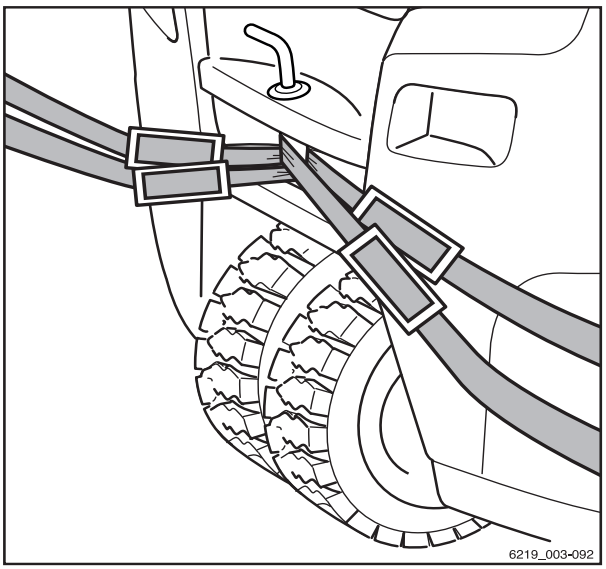

⚠ DANGER

The load may slip if the lashing straps/tension belts slip!

The truck must be lashed securely so that it cannot move during transportation.

– Make sure that the lashing straps/tension belts are tightened securely and that the pads cannot slip off.

Crane loading

Crane loading is only intended for transporting the complete truck, including the lift mast, for its initial commissioning. This may be performed only by the authorised service

centre with the harnesses expressly provided and approved for this purpose.

– Do not load the truck by crane!

Decommissioning

Decommissioning and storing the truck

⚠ CAUTION

Damage to components due to incorrect storage!

Improper storage or decommissioning for a period of more than two months can result in corrosion damage to the truck. If the truck is parked in an ambient temperature of below -10°C for an extended period, the batteries will cool down. The electrolyte may freeze and damage the batteries.

– Store the truck in a dry, clean, frost-free and well-ventilated environment.
– Implement the following measures before decommissioning.

Measures to be implemented before decommissioning

– Clean the truck thoroughly; see the chapter entitled "Cleaning the truck".
– Lift the fork carriage to the stop several times.
– Tilt the lift mast forwards and backwards several times and, if fitted, move the attachment repeatedly.
– To relieve the strain on the load chains, lower the fork onto a suitable supporting surface, e.g. a pallet.
– Check the hydraulic oil level.
– Apply a thin layer of oil or grease to all uncoated moving parts.
– Lubricate the truck according to the "lubrication plan".
– Lubricate the joints and actuators.

CAUTION

Potential for damage to the battery male connector!

If the battery male connector is disconnected while the truck is switched on (under load), an electric arc will be produced. This can lead to erosion of the contacts, which considerably shortens the service life of the contacts.

- Switch off the truck before the battery male connector is disconnected.
- Do not disconnect the battery male connector while the truck is switched on, except in an emergency.

- Disconnect the battery male connector.
- Check the battery condition, acid level and acid density.
- Service the battery.

NOTE

Only store batteries that are fully charged.

- Spray all exposed electrical contacts with a suitable contact spray.

CAUTION

Tyre deformation as a result of continuous loading on one side!

Have the truck raised and jacked up by the authorised service centre so that all wheels are off the ground. This prevents permanent deformation of the tyres.

- Only have the truck raised and jacked up by the authorised service centre.

CAUTION

Risk of corrosion damage due to condensation on the truck!

Many plastic films and synthetic materials are watertight. Condensation water on the truck cannot escape through these covers.

- **Do not** use plastic film as this facilitates the formation of condensation water.
- Cover with vapour-permeable material, e.g. cotton.

- Cover the truck to protect it from dust.
- If the truck needs to be shut down for even longer periods, contact the authorised

service centre to find out about additional courses of action.

Use after storage or decommissioning

If the truck has been decommissioned for longer than six months it must be checked carefully before being used again. As with the annual safety inspection, this inspection must also include all safety-related aspects of the truck.

– Clean the truck thoroughly; see the chapter entitled "Cleaning the truck".
– Lubricate the joints and actuators.
– Check the battery condition, acid level and acid density.
– Check the hydraulic oil for condensation water. Change the hydraulic oil if necessary.
– Arrange for the authorised service centre to perform the same inspections and tasks that were carried out before initial commissioning.
– The explosion protection inspection must be performed by the authorised service centre.
– Perform the "visual inspections and functional checks".

The following points in particular must be checked:

- Drive
- Controller
- Steering
- Brakes (service brake, parking brake)
- Lifting system (lifting accessories, load chains, mounting)

NOTE

For further information, see the workshop manual for the truck or contact the authorised service centre.

5

Maintenance

Safety regulations for maintenance

General information

To prevent accidents during maintenance and repair work, all necessary safety measures must be taken, e.g.:

- Apply the parking brake.
- Turn off the key switch and remove the key.
- Disconnect the battery male connector.
- Ensure that the truck cannot move unintentionally or start up inadvertently.
- If required, have the truck jacked up by the authorised service centre.
- Have the raised fork carriage or the extended lift mast secured against accidental lowering by the authorised service centre.
- Insert an appropriately sized wooden beam as an abutment between the lift mast and the cab, and secure the lift mast to prevent it tilting backwards unintentionally.
- Observe the maximum lift height of the lift mast, and compare the dimensions from the technical data with the dimensions of the hall into which the truck is to be driven. These steps are taken to prevent a collision with the ceiling of the hall and to avoid any damage caused as a result.

Working on the hydraulic equipment

The hydraulic system must be depressurised prior to all work on the system.

Working on the electrical equipment

Work may only be performed on the electrical equipment of the truck when it is in a voltage-free state. Function checks, inspections and adjustments on energised parts must only be performed by trained and authorised persons, taking the necessary precautions into account. Rings, metal bracelets etc. must be removed before working on electric components.

To prevent damage to electronic systems with electronic components, such as an electronic driving regulator or lift control, these components must be removed from the truck prior to the start of electric welding.

Work on the electrical system (e.g. connecting a radio, additional headlights etc.) is only permitted with approval from the authorised service centre.

Safety devices

After maintenance and repair work, all safety devices must be reinstalled and tested for operational reliability.

Set values

The device-dependent set values must be observed when making repairs and when changing hydraulic and electrical components. These are listed in the appropriate sections.

Lifting and jacking up

⚠ DANGER

There is a risk to life if the truck tips over!

If not raised and jacked up properly, the truck may tip over and fall off. Only the hoists specified in the workshop manual for this truck are allowed and are tested for the necessary safety and load capacity.

- Only have the truck raised and jacked up by the authorised service centre.
- Only jack the truck up at the points specified in the workshop manual.

The truck must be raised and jacked up for various types of maintenance work. The authorised service centre must be informed that this is to take place. Safe handling of the truck and the corresponding hoists is described in the truck's workshop manual.

Working at the front of the truck

DANGER

Risk of accident due to an unsecured lift mast.

If the lift mast or fork carriage is raised, no work may be performed on the lift mast or at the front of the truck unless the appropriate safety measures are put in place.

- When securing, only use chains with sufficient load-bearing capacity.
- Contact the authorised service centre regarding this matter.

CAUTION

Possibility of damage to the ceiling!

- Note the maximum lift height of the lift mast.

Securing the lift mast against tilting backwards

DANGER

Risk of accident!

This work must only be performed by an authorised service technician.

- To secure the lift mast against tilting back, contact the authorised service centre.

Removing the lift mast

DANGER

Risk of accident!

This work must only be performed by an authorised service technician.

- Commission the authorised service centre to remove the lift mast.

Securing the lift mast against falling off

DANGER

Risk of accident!

This work must only be performed by an authorised service technician.

- To secure the lift mast against falling, contact the authorised service centre.

General maintenance information

Personnel qualifications

Only qualified and authorised personnel are allowed to perform maintenance work. Regular safety checks and checks after unusual incidents must be performed by a competent person. The competent person must conduct their evaluation and assessment from a safety standpoint, unaffected by operational and economic conditions. The competent person must have sufficient knowledge and experience to be able to assess the condition of a truck and the effectiveness of the protective devices in accordance with technical conventions and the principles for testing trucks.

Maintenance personnel for batteries

Batteries may only be charged, serviced, and replaced by personnel who have received appropriate training in accordance with the instructions from the manufacturers of the battery, battery charger and truck.

– Follow the handling instructions for the battery and the operating instructions for the battery charger.

Maintenance work without special qualifications

Simple maintenance work, such as checking the hydraulic oil level, may be carried out by untrained personnel. A qualification such as those held by a competent person is not required to carry out this work. The required tasks are described in the chapter entitled "Remaining ready for operation".

Information for carrying out maintenance

This section contains all the information required to determine when the truck requires maintenance. Carry out maintenance work within the time limits according to the hour meter and using the maintenance check lists below. This ensures that the truck remains ready for operation and provides optimal

performance and service life. It is also a precondition for any warranty claims.

Maintenance timeframe

If maintenance is required, the symbol appears on the display.

– Arrange for the authorised service centre to perform the maintenance work on the truck.

– The maintenance check lists indicate the maintenance work that is due.

The intervals are defined for standard use. Shorter maintenance intervals can be defined in consultation with the operating company, depending on the application conditions of the truck.

The following factors may necessitate shorter maintenance intervals:

- Dirty, poor-quality roadways
- Dusty or salty air
- High levels of air humidity
- Extremely high or low ambient temperatures and extreme changes in temperature
- Multi-shift operation with a high duty cycle
- Specific national regulations for the truck or individual components

Service menu

The date when the truck requires maintenance is stored in the Service menu.

NOTE

Access to the settings menu is only available if the truck is at a standstill and the parking brake is applied. If the parking brake is released prematurely, the settings menu will close. Access is only granted when the password is entered by the fleet manager.

– Stop the truck.

– Actuate the parking brake.

– Press the button .

– Press the "Settings" softkey .

The first menu level appears.

– Activate the "Access authorisation for the fleet manager".

The display changes to the "Settings menu".

– Press the `Service` softkey 🔧.

The "Service menu" opens on the display.

– Press the `Maintenance interval` softkey.

This menu shows the operating hours remaining before the next scheduled maintenance interval.

Maintenance - 1000 hours/annually

At operating hours										Carried out	
1000		2000		4000		5000		7000			
8000		10000		11000		13000		14000		✓	✖
Chassis, bodywork and fittings											
Check the chassis for cracks.											
Check the overhead guard/cab and panes of glass for damage.											
Check that the cab door sensor is working correctly and check for damage.											
Check the controls, switches and joints for damage, and apply grease and oil.											
Check that the driver's seat is working correctly and check for damage.											
Check that the driver restraint system is working correctly and check for damage, and clean.											
Check the signal horn.											
Variant: Check the dual-pedal variant for damage and that it is working correctly, and lubricate.											
Tyres and wheels											
Check tyres for wear and check the air pressure if necessary.											
Check the wheels for damage and check the tightening torques.											
Power unit											
Check the mounting of the drive axle, check for leaks and clean the cooling fins.											
Check that the conductor rails between the power modules and the motor connections are mounted correctly.											
Check the oil level in the drive wheel unit and the multi-disc brake.											
Change the gearbox oil (once after the first 1000 hours).											
Steering											
Check the steering system for leaks and check that it is working correctly.											
Check that the steering wheel is securely attached and check the rotary handle for damage.											
Check that the steering axle is securely mounted, check for leaks and apply grease.											
Check the steering stop.											
Brakes											
Check the condition of all mechanical brake parts and check that they are working correctly.											
Check the actuation distance of the foot brake and adjust if necessary.											
Check the manual force required to apply the handbrake and adjust if necessary.											

At operating hours										Carried out	
1000		2000		4000		5000		7000			
8000		10000		11000		13000		14000		✓	✗
Variant: Check the play between the fork clevis and the axle lever and adjust if necessary.											
Perform a brake test.											
Electrical system											
Check all power cable connections.											
Check that the switches, transmitters and sensors are working correctly.											
Check the lighting and indicator lights.											
Cooling system (converter and drive axle)											
Check that the fans and the air ducts are working correctly and check for damage.											
Clean the fans and the air ducts.											
Clean the cooling fins on the converter and the traction motors.											
Battery and accessories											
Check the lead-acid battery for damage and check the acid density; observe the manufacturer's maintenance instructions.											
Variant: Replace the non-return valve on lead-acid batteries with electrolyte circulation.											
Variant: Observe the manufacturer's maintenance instructions for lithium-ion batteries.											
Check the appliance plug and the truck harness for damage.											
Check the battery male connector and the battery harness for damage.											
Battery compartment											
Check that the battery door, and the sensor if necessary, is working correctly and check for damage.											
Check the battery lock for damage.											
Grease the battery door hinges.											
Variant: Check the oil level of the hydraulic battery carrier and check for leaks. Check all moving parts for wear and lubricate them.											
Variant: Clean the heat sink and the fan on the on-board charger. Check the filter for the electrolyte circulation pump.											
Hydraulics											
Check the condition of the hydraulic system, check that it is working correctly and check for leaks.											
Check the hydraulics blocking function (ISO valve).											
Check the oil level.											

General maintenance information

At operating hours										Carried out	
1000		2000		4000		5000		7000			
8000		10000		11000		13000		14000		✓	✖
Lift mast											
Check the mast bearings for damage. Lubricate the mast bearings and check the tightening torque.											
Check the mast profiles for damage and wear. Lubricate the mast profiles.											
Check the guide in the lower (load reversal) mast profile for damage and for wear.											
Check the load chains for damage and wear. Adjust and lubricate the load chains.											
Check the lift cylinders and connections for damage and for leaks.											
Check the guide pulleys for damage and for wear.											
Check the support rollers and chain rollers for damage and for wear.											
Check the play between the fork carriage stop and the run-out barrier.											
Check the tilt cylinders and connections for damage and for leaks.											
Check the fork carriage for damage and for wear.											
Check the fork arm interlock for damage and check that it is working correctly.											
Check the fork arms for wear and deformation.											
Check that there is a safety screw on the fork carriage or on the attachment.											
Special equipment											
Check the condition of the antistatic belt or antistatic electrode.											
Check that the heating system is working correctly; observe the manufacturer's maintenance instructions.											
Check the attachments for wear and for damage; observe the manufacturer's maintenance instructions.											
Check the trailer coupling for wear and for damage; observe the manufacturer's maintenance instructions.											
General											
Read out the error numbers and clear the list.											
Reset the maintenance interval.											
Check that the labelling is complete.											
Perform a test drive.											

Maintenance - 3000 hours/every two years

At operating hours										Carried out	
3000		6000		9000		12000		15000		✓	✗
Note											
Perform all 1000-hour maintenance work.											
Power unit											
Change the gearbox oil in the drive wheel unit.											
Replace the bleeder screws on the drive wheel units.											
Hydraulics											
Change the hydraulic oil.											
Replace the return line filter and the breather filter.											
Variant: Replace the high-pressure filter.											

Ordering spare parts and wearing parts

Spare parts are provided by our spare parts service department. The information required for ordering parts can be found in the spare parts list.

Only use spare parts as per the manufacturer's instructions. The use of unapproved spare parts can result in an increased risk of accidents due to insufficient quality or incorrect assignment. Anyone using unapproved spare parts shall assume unlimited liability in the event of damage or harm.

Quality and quantity of the required operating materials

Only the operating materials specified in the maintenance data table may be used.

– The required consumables and lubricants can be found in the maintenance data table.

Oil and grease types of a different quality must not be mixed. This negatively affects the lubricity. If a change between different

manufacturers cannot be avoided, drain the old oil thoroughly.

Before carrying out lubricating work, filter changes or any work on the hydraulic system, carefully clean the area around the part involved.

When topping up working materials, use only clean containers!

Lubrication plan

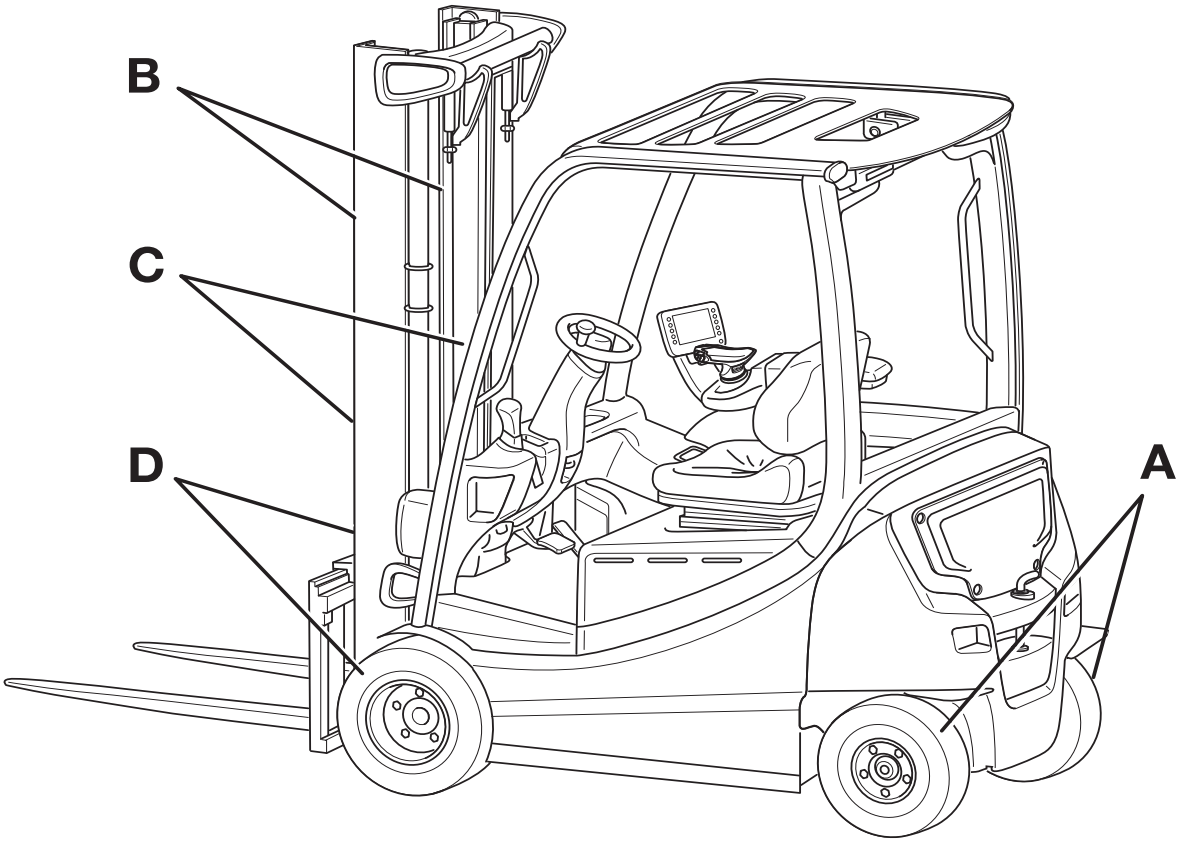

Code[1]	Lubrication point
(A)	Swing axle: two lubricating nipples on each side of the steering axle on the steering arm Steering turntable: not present
(B)	Sliding surfaces on the lift mast
(C)	Load chains
(D)	One lubricating nipple on each of the two lift mast bearings

[1]The respective lubricant specification can be found in the "Maintenance data table" section below, under this Code.
This lubrication plan describes the series-production truck with standard equipment. For maintenance points on variant trucks, see the relevant chapter and/or instructions provided by the manufacturer.

Maintenance data table

General lubrication points

Code	Unit	Operating materials	Specifications	Dimension
	Lubrication	High-pressure grease	ID no. 0147873	As required

Battery

Code	Unit	Operating materials	Specifications	Dimension
	System filling	Distilled water		As required
	Insulation resistance		DIN 43539 VDE 0510	For further information, refer to the workshop manual for the truck in question.

Electrical system

Code	Unit	Operating materials	Specifications	Dimension
	Insulation resistance		DIN EN 1175 VDE 0117	For further information, refer to the workshop manual for the truck in question.

Controls/joints

Code	Unit	Operating materials	Specifications	Dimension
	Lubrication	High-pressure grease	ID no. 0147873	As required
		Oil	SAE 80 MIL-L2105 API-GL4	As required
	Dual-pedal operation	High-pressure grease	ID no. 0147873	As required

Hydraulic system

Code	Unit	Operating materials	Specifications	Dimension
	System filling	Hydraulic oil	HVLP 68 DIN 51524, Part 3	23 to 30 l Dependent on the lift mast and lift height
		Hydraulic oil for the food industry (variant)	USDA H1 DIN 51524	
		Hydraulic oil for cold store application	HVLP 68 DIN 51524, Part 3	

NOTE

When changing to a different type of hydraulic oil, the authorised service centre must adjust the truck control unit.

Hydraulic battery carrier

Code	Unit	Operating materials	Specifications	Dimension
	Catch rail	Multi-purpose oil, acid-free, resin-free	Rivolta TRS Plus ID no. 0149847	As required
	Slide elements and guide rails	High-pressure grease	ID no. 0147873	As required
	System filling	Hydraulic oil	HVLP 68 DIN 51524, Part 3	Have the battery carrier filled by the authorised service centre.

Tyres

Code	Unit	Operating materials	Specifications	Dimension
	Superelastic tyres	Wear limit		To wear mark
	Solid rubber tyres	Wear limit		To wear mark
	Pneumatic tyres	Minimum tread depth		Air pressure: see information on truck Min. tread depth: 1.6 mm

Steering axle

Code	Unit	Operating materials	Specifications	Dimension
(A)	Axle stub bearing, spherical bearing	High-pressure grease	ID no. 0147873	As required
	Wheel nuts	Torque wrench	Swing axle	195 Nm
			Steering axle	195 Nm

Drive axle

Code	Unit	Operating materials	Specifications	Dimension
	Wheel screws	Torque wrench		210 Nm
	Wheel gear	Gearbox oil	SAE 80W-90 API-GL4	0.3 l

Lift mast

Code	Unit	Operating materials	Specifications	Dimension
(B)	Lubrication	High-pressure grease	ID no. 0147873	As required
	Stop	Play		Min. 2 mm

Code	Unit	Operating materials	Specifications	Dimension
(D)	Lift mast bearing	Grease	Aralub 4320 DIN 51825-KPF2N20 ID no. 0148659	Fill with grease until a small amount of fresh grease escapes
	Screws for the lift mast bearing	Torque wrench		310 Nm

Load chains

Code	Unit	Operating materials	Specifications	Dimension
(C)	Lubrication	High-load chain spray	Fully synthetic Temperature range: -35°C to +250°C ID no. 0156428	As required

Washer system

Code	Unit	Operating materials	Specifications	Dimension
	System filling	Screen wash	Winter, ID no. 172566	As required

Preserving operational readiness

Lubricating the joints and controls

▷

– Oil or grease bearings and joints according to the "maintenance data table".

- Driver's seat guide
- Cab door hinges (variant)
- Battery-door hinges or battery-cover hinges
- Actuating rod (1) for valves (with multi-lever operation)

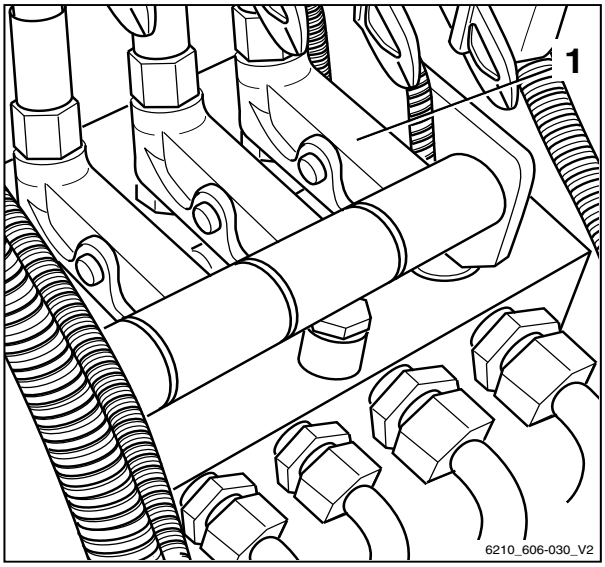

Checking the battery interlock and the battery door interlock

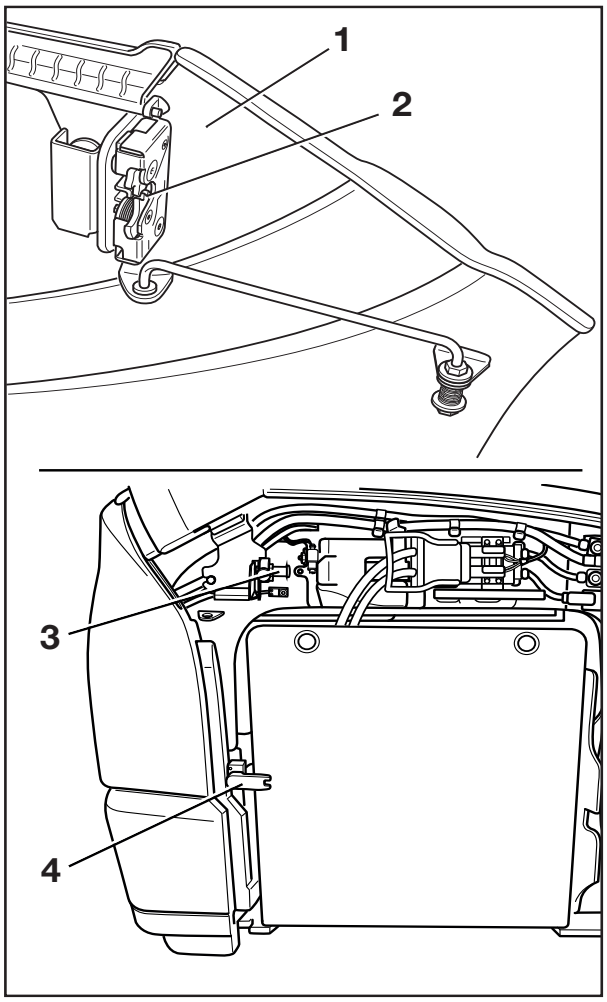

DANGER

A malfunction of the battery interlock and the battery door interlock can cause the battery door to open and the battery could possibly fall out when the truck is tilted or during sharp deceleration. If the battery falls out, there is a danger of being crushed to death.

- If the interlock is deformed, damaged or difficult to move, inform the authorised service centre immediately. Do not operate the truck.
- Check that the interlocks function correctly.
- The interlocks must be greased and must move easily.
- Always check the interlock after an accident.

NOTE

The interval for greasing is influenced significantly by the application conditions and the environmental conditions affecting the truck. Visual inspections and function checking of the interlock must be carried out as required and after every 1000 hours. Grease all moving parts of the interlock as necessary.

- Open the battery door (1).
- Check that the door lock (2) and the battery lock (4) move easily and that they are not deformed or damaged.
- Check that the indexing bolt (3) on the door lock is seated correctly and that it is not deformed or damaged.
- Grease the mechanisms of the interlocks.
- Close the battery door again.

Maintaining the seat belt

DANGER

There is a risk to life if the seat belt fails during an accident!

If the seat belt is faulty, it may tear or open during an accident and no longer keep the driver in the driver's seat. The driver may therefore be hurled against the truck components or out of the truck.

- Ensure operational reliability by continually testing.
- Do not use a truck with a defective seat belt.
- Only have a defective belt replaced by your service centre.
- Only use genuine spare parts.
- Do not make any changes to the belt.

NOTE

Carry out the following checks on a regular basis (monthly). In the case of significant strain, a daily check is necessary.

Checking the seat belt

- Pull out the belt (3) completely and check for wear.

The belt must not be frayed or cut. The stitching must not be loose.

- Check whether the belt is dirty.
- Check whether parts are worn or damaged, including the attachment points.
- Check the buckle (1) to ensure that it locks in properly.

When the belt tongue (2) is inserted, the belt must be held securely.

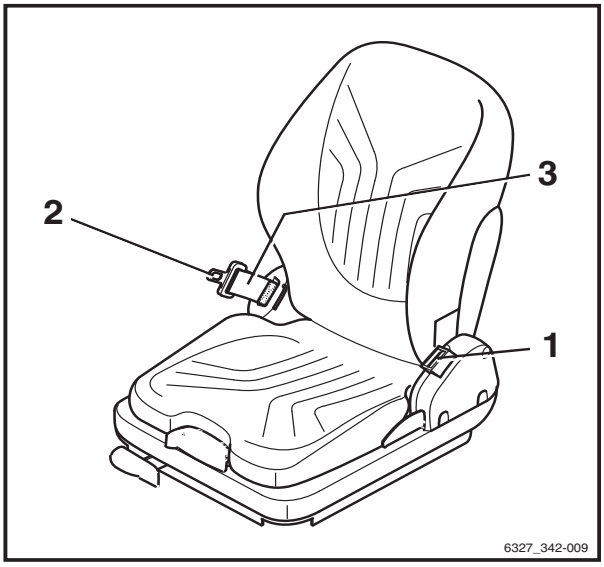

- The belt tongue (2) must release when the red button (4) is pressed.
- The automatic blocking mechanism must be tested at least once a year:
- Park the forklift truck on level ground.
- Pull out the belt with a jerk.

The automatic blocking mechanism must block extension of the belt.

- Tilt the seat at least 30 ° (if necessary, remove the seat).
- Slowly extend the belt.

The automatic blocking mechanism must block extension of the belt.

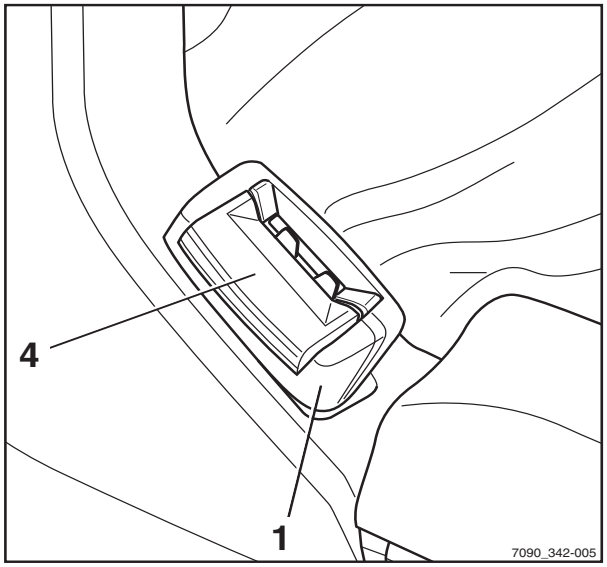

Cleaning the seat belt

- Clean the seat belt as necessary, but without using chemical cleaning materials (a brush will suffice).

Replacement after an accident

As a rule, the seat belt must be changed after an accident.

Checking the driver's seat

WARNING

Risk of injury!

- After an accident, check the driver's seat with attached restraining belt and fastening.

- Check the controls for correct operation.
- Check the condition of the seat (e.g. wear on the upholstery) and secure fastening to the hood.

WARNING

Risk of injury!

- Have the seat repaired by the service centre if you identify any damage during the checks.

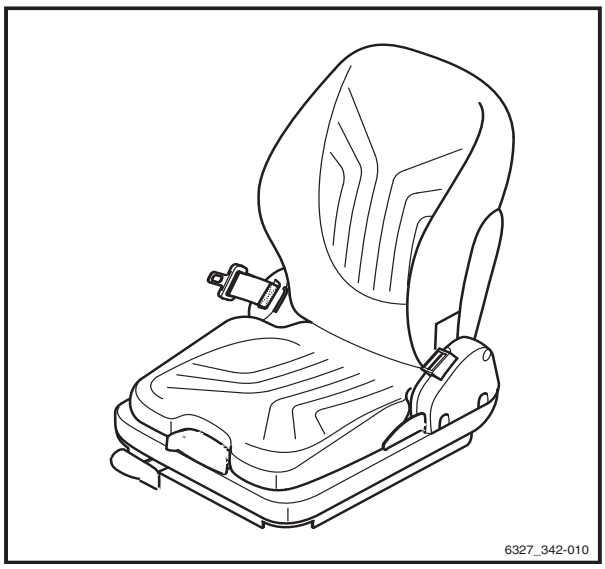

Maintaining the heater or air conditioning system

Replacing the filter mat

– Loosen the screw (1).

– Remove the cover (2).

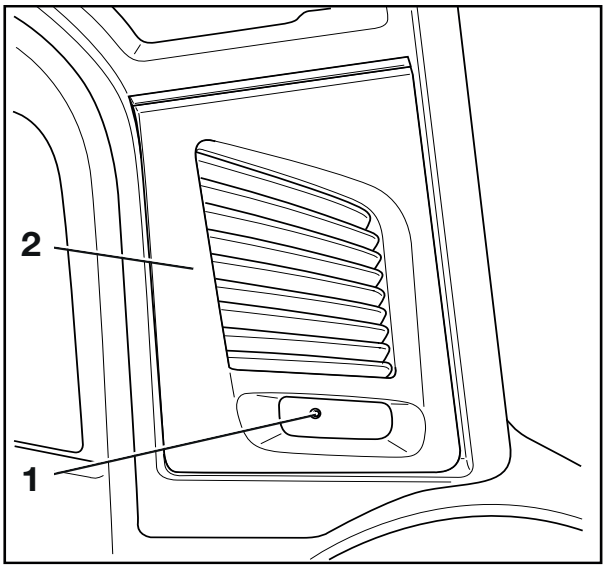

– Check the filter mat (1) for contamination.

– If the filter mat is grey in colour, replace it.

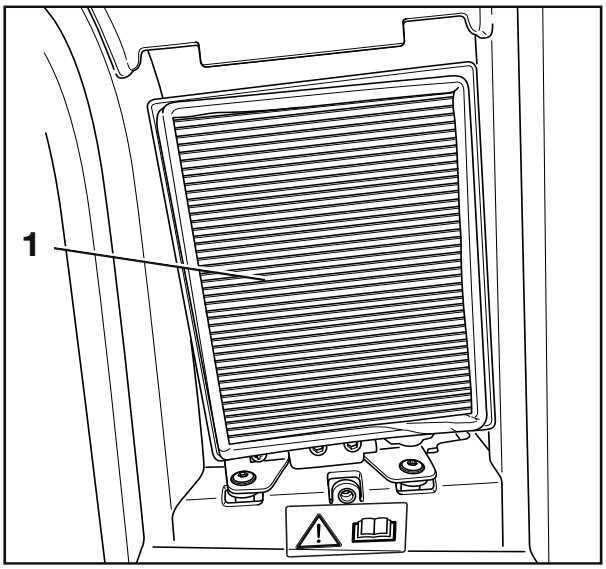

NOTE

Change the filter mat at least every two months.

Cleaning the fresh-air inlet

The fresh-air inlet must be cleaned if the filter mat:

- Is damaged,
- Is incorrectly seated in the filter frame,
- Has not been replaced every two months.

– Remove the filter mat.

– Loosen the screws (1) on the filter frame (2). ▷
– Remove the filter frame (2).

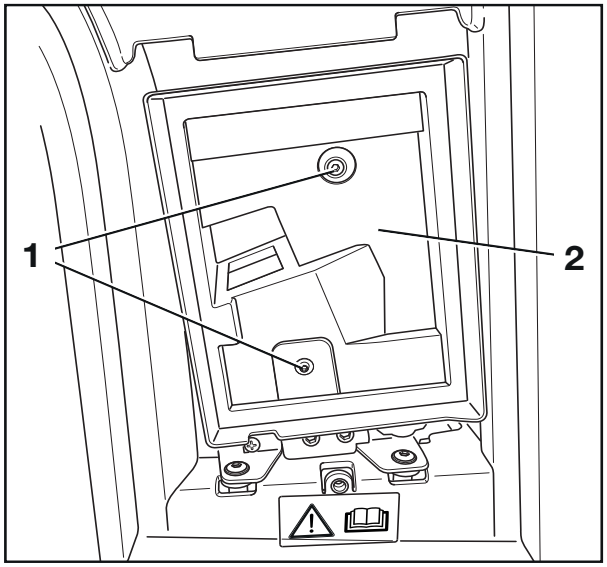

– Remove any dust and dirt from the fresh-air inlet (1) beneath the filter mat carrier. ▷

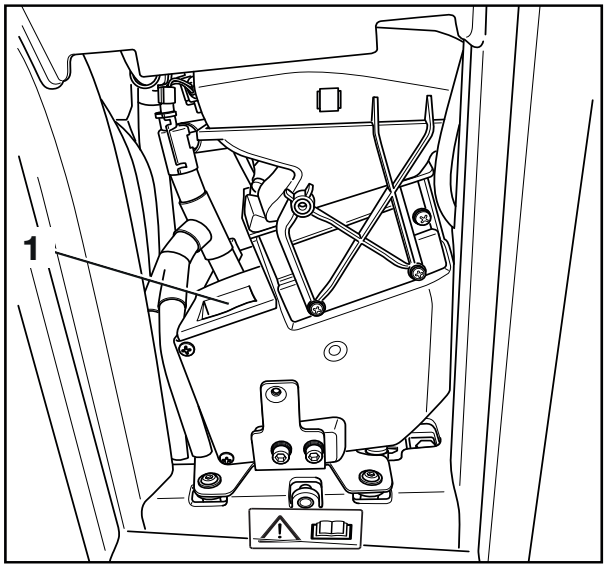

Servicing wheels and tyres

WARNING

Risk of accident!

Uneven wear reduces the stability of the truck and increases the braking distance.

– Change worn or damaged tyres without delay.

WARNING

Risk of tipping!

Tyre quality affects the stability of the truck.

If you wish to use a different type of tyre on the truck from the tyres approved by the truck manufacturer, or tyres from a different manufacturer, you must first obtain approval from the truck manufacturer.

WARNING

Risk to stability!

When using pneumatic tyres or solid rubber tyres, rim wheel parts must never be changed and rim wheel parts from different manufacturers must not be mixed.

Checking the condition and wear of the tyres

▷

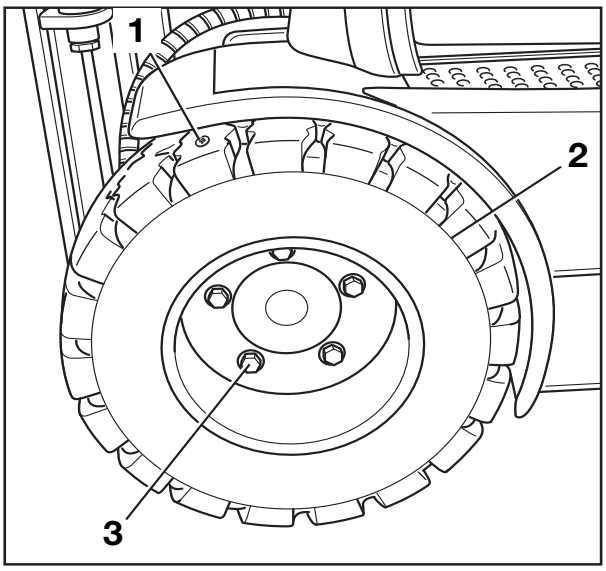

WARNING

Tyre quality affects the stability and handling of the truck.

Changes must only be made following consultation with the manufacturer.

When changing wheels or tyres, ensure that this does not cause the truck to tilt to one side (e.g. always replace right-hand and left-hand wheels at the same time).

– If necessary, remove any foreign bodies (1) embedded in the tyre tread.

NOTE

The level of wear exhibited by tyres on the same axle must be approximately the same. Superelastic tyres and solid rubber tyres can be worn down to the wear mark (2).

Checking wheel fastenings

- Check that the wheel-fastening screws (3) of the drive axle and the wheel-fastening nuts of the steering axle are securely in place and re-tighten them as necessary.
- Observe the torques specified in the "Maintenance data table".

Servicing the steering axle

- Park the truck safely.

Lubricate the steering axle

ENVIRONMENT NOTE

Dispose of old grease and contaminated devices in accordance with the national regulations for the country in which the truck is being used.

The steering arms of the steering axle each have two lubricating nipples per side.

- Lubricate the lubricating nipples with grease in accordance with the "maintenance data table".

If, after a few strokes, there is no longer any old grease escaping, actuate the steering.

WARNING

Risk of crushing!
Do not actuate the steering during lubrication.

- Switch on the truck.
- Actuate the steering.
- Park the truck safely again.
- Repeat the lubrication procedure.

NOTE

Please note: the more often the truck is cleaned, the more frequently it must be lubricated.

Checking the battery

– For information on checking the battery, see the chapter entitled "Checking the battery condition, acid level and acid density".

Replacing the fuses

DANGER

Danger from electrical current!

High voltages are present in the fuse box. There is a risk of electric shock.

– **Do not** open the fuse box.
– The fuses must be replaced only by the authorised service centre.

Checking the hydraulic system for leak tightness

WARNING

Hydraulic oil is hazardous to health!

Hydraulic oil under pressure can escape from leaking pipes and lines, and cause injuries.

– Wear suitable protective gloves, protection goggles etc.

CAUTION

Hydraulic hoses become brittle!

– Do not store hydraulic hoses for more than two years.
– Do not use hydraulic hoses for more than six years if they are subject to normal wear.
– Do not use hydraulic hoses for more than two years if they are subject to a high level of wear.
– Comply with the specifications of DGUV 113-020 in Germany.
– Outside of Germany, observe the national regulations for the country of use.

– Check pipe and hose connection screw joints for leaks (traces of oil).

Replace hose lines if they display the following abnormalities:

- Outer layer has been damaged, or is brittle or cracked
- Leaking
- Deformation (e.g. with blisters or kinks)
- A fitting has come loose
- A fitting is badly damaged or corroded

Replace pipes if they display the following abnormalities:

- Abrasion
- Deformation and bending
- Leaking

Checking the hydraulic oil level

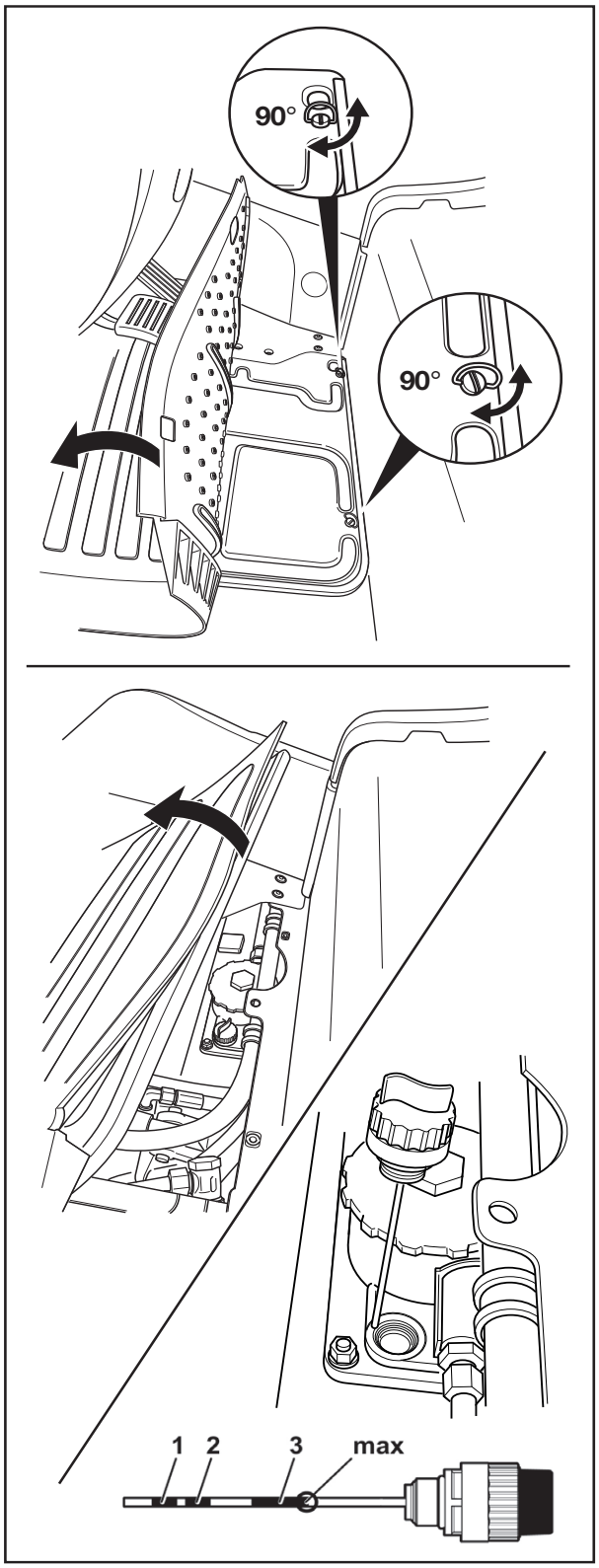

WARNING

Hydraulic oils are hazardous to your health.

- Observe the safety regulations in the chapter entitled "Hydraulic fluid".

- Park the truck safely on a horizontal surface.
- Tilt the lift mast backwards until it reaches the stop.
- Lower the fork carriage; if attachments are fitted, retract the working cylinders.

CAUTION

Potential for damage to the battery male connector!

If the battery male connector is disconnected while the key switch is on (under load), an arc will be produced. This can lead to erosion at the contacts, which considerably shortens the service life of the contacts.

- Switch off the key switch before disconnecting the battery male connector.
- Do not disconnect the battery male connector while the key switch is switched on, except in an emergency.

- Disconnect the battery male connector.
- Fold up the floor mat.
- Turn the bayonet catches on the bottom plate 90° to the left.
- Fold up the bottom plate with the floor mat and secure it in place.

NOTE

The components for dual-pedal operation are attached to the bottom plate from below. If the electric cable for dual-pedal operation is stretched out, disconnect the connection assembly from the drive potentiometer. After checking the oil level, reattach the connection assembly.

- Unscrew the breather filter with the dipstick in an anti-clockwise direction.
- Keep the breather filter and dipstick in a horizontal position.

– Check the oil level on the dipstick.

ENVIRONMENT NOTE

Carefully collect any spilt hydraulic oil. Dispose of this hydraulic oil in accordance with environmental regulations.

The marks (1), (2) and (3) indicate the required filling levels for the different lift mast versions. The uppermost mark (max) indicates the maximum filling quantity for a triple mast with a lift height ≥ 2360 mm.

Assignment of the lift mast version to the mark on the dipstick

Marking	Lift height [mm]				
	Telescopic lift mast		Triple mast		
	1.6...1.8 t	2.0 t	1.6 t	1.8 t	2.0 t
1	≤ 3010	≤ 2610	≤ 2110	≤ 2160	≤ 1910
2	3060...3260	2660...3260	2160...2660	2210...2710	1960...2310
3	-	-	≥ 2710	≥ 2760	≥ 2360

CAUTION

Risk of damage.

If the hydraulic oil level is too low, the steering is restricted and the pump may be damaged.

– If the oil level is too low, do not use the truck and contact the authorised service centre.

– Screw in the breather filter and the dipstick in a clockwise direction.

– Close the bottom plate again.

– Position the floor mat.

– Connect the battery male connector.

Lubricating the lift mast and roller track ▷

– Remove dirt and lubricant residue from the roller track.

– Lubricate the roller tracks (1) of the outside, middle, and inside mast with a super-pressure adhesion lubricant to reduce wear. See ⇒ Chapter "Maintenance data table", P. 5-362.

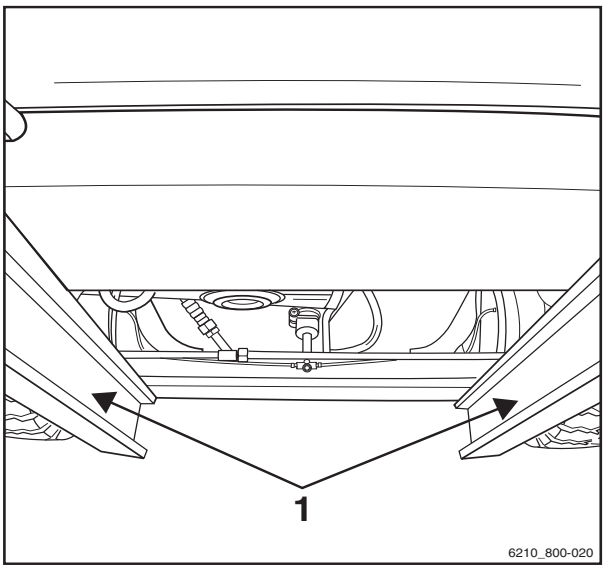

NOTE

Spray the roller track evenly from a distance of approx. 15-20 cm. Wait approx. 15 minutes until the equipment is ready to use again.

Preserving operational readiness for cold store application ▷

– On trucks for cold store application (variant), check all rollers and chains in the lift mast for ease of movement once a week.

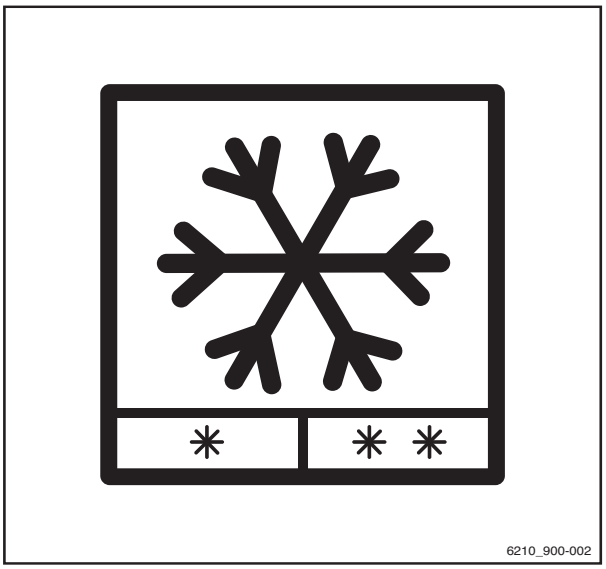

1000-hour maintenance/yearly maintenance

Other tasks

– Perform all tasks required to maintain full operability; see the chapter entitled "Remaining ready for operation".

Checking the lift cylinders and connections for leaks

▷

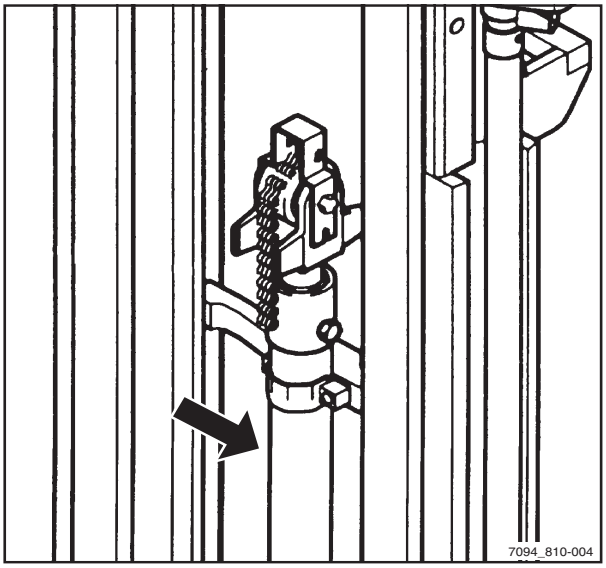

⚠ WARNING

Risk of injury

Observe safety regulations for working on the lift mast, see the "Working at the front of the truck" chapter.

– Check hydraulic connections and lift cylinders for leaks (visual inspection).

– Have leaking screw joints or leaking hydraulic cylinders repaired by the authorised service centre.

Checking the fork arms

▷

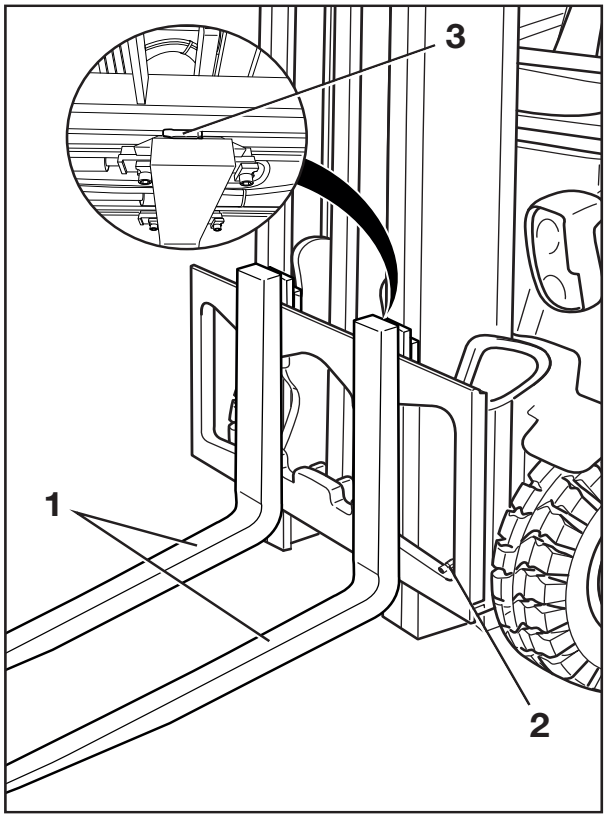

– Check the fork arms (1) for any visible deformation. Wear must not amount to more than 10% of the original thickness.

⚠ CAUTION

Risk of component damage!

Always replace worn fork arms in pairs.

– Check that the fork latch (3) is functioning correctly.

– Make sure that the locking screw (2) is present and cannot fall out.

Checking the reversible fork arms

▷

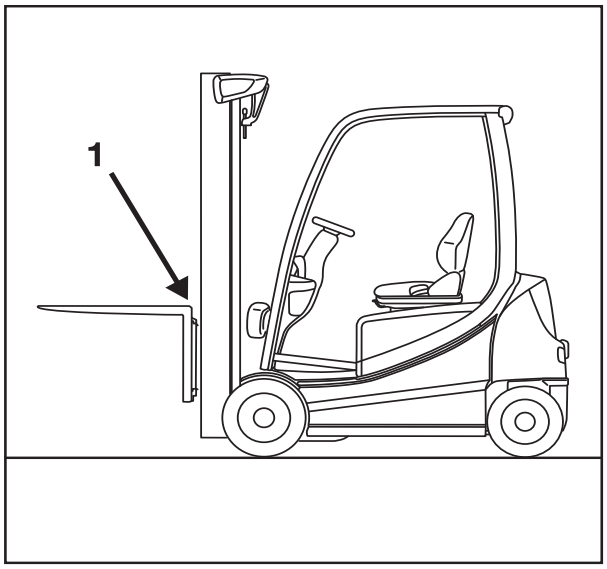

NOTE

This check is only required for reversible fork arms (variant).

– Check the outside of the fork bend (1) for cracks. Contact your service centre.

Checking the double pedal

- Remove the floorplate.
- Check that the support and springs of the double pedal mechanism are securely positioned.
- Check that all screws are sealed with locking varnish.

▷

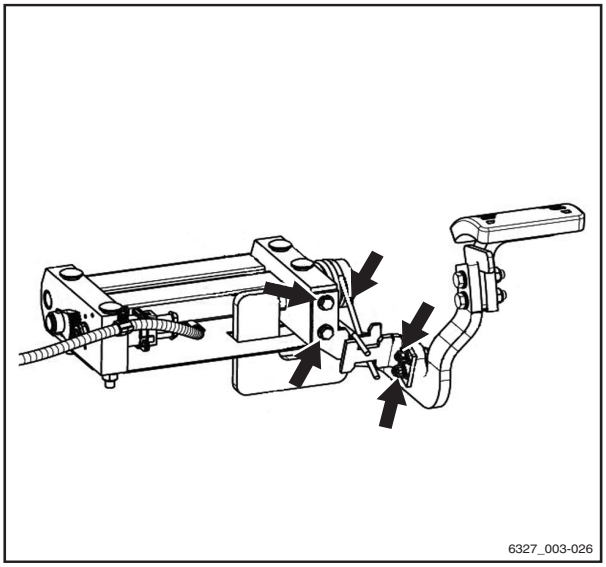

Checking the battery changeover frame

- The screw joints and welded seams of the battery changeover frame must be subjected to a visual inspection.

6

Technical data

Ergonomic dimensions

WARNING

Danger of impact injuries to the head!

If the head of the operator is located too close to the underside of the roof, the suspension of the driver's seat or an accident may cause the head to strike the overhead guard.

To avoid head injuries, a minimum distance of **40 mm** must be ensured between the underside of the roof and the head of the tallest operator.

To determine the actual head clearance, the operator must sit in the driver's seat and the seat suspension must be set to this driver's requirements.

Due to the individual nature of height and body weight as well as the wide variety of types of driver's seat and overhead guard, the minimum head clearance must be ensured in every truck.

The driver's compartment has been designed taking ergonomics in the workplace into account and in accordance with EN ISO 3411. In general, from the seat position, the operator has sufficient space to reach the operating devices safely, to operate the truck and to view the outline of the truck. Operators whose body size deviates from the specified dimensions on which EN ISO 3411 is based must be individually considered by the operating company.

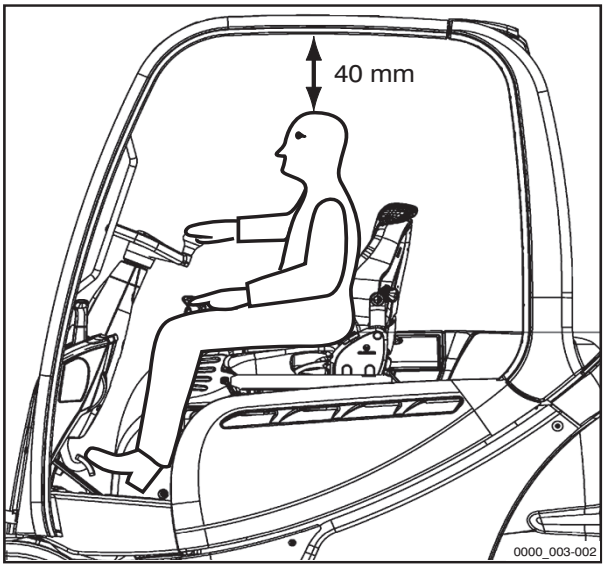

Dimensions

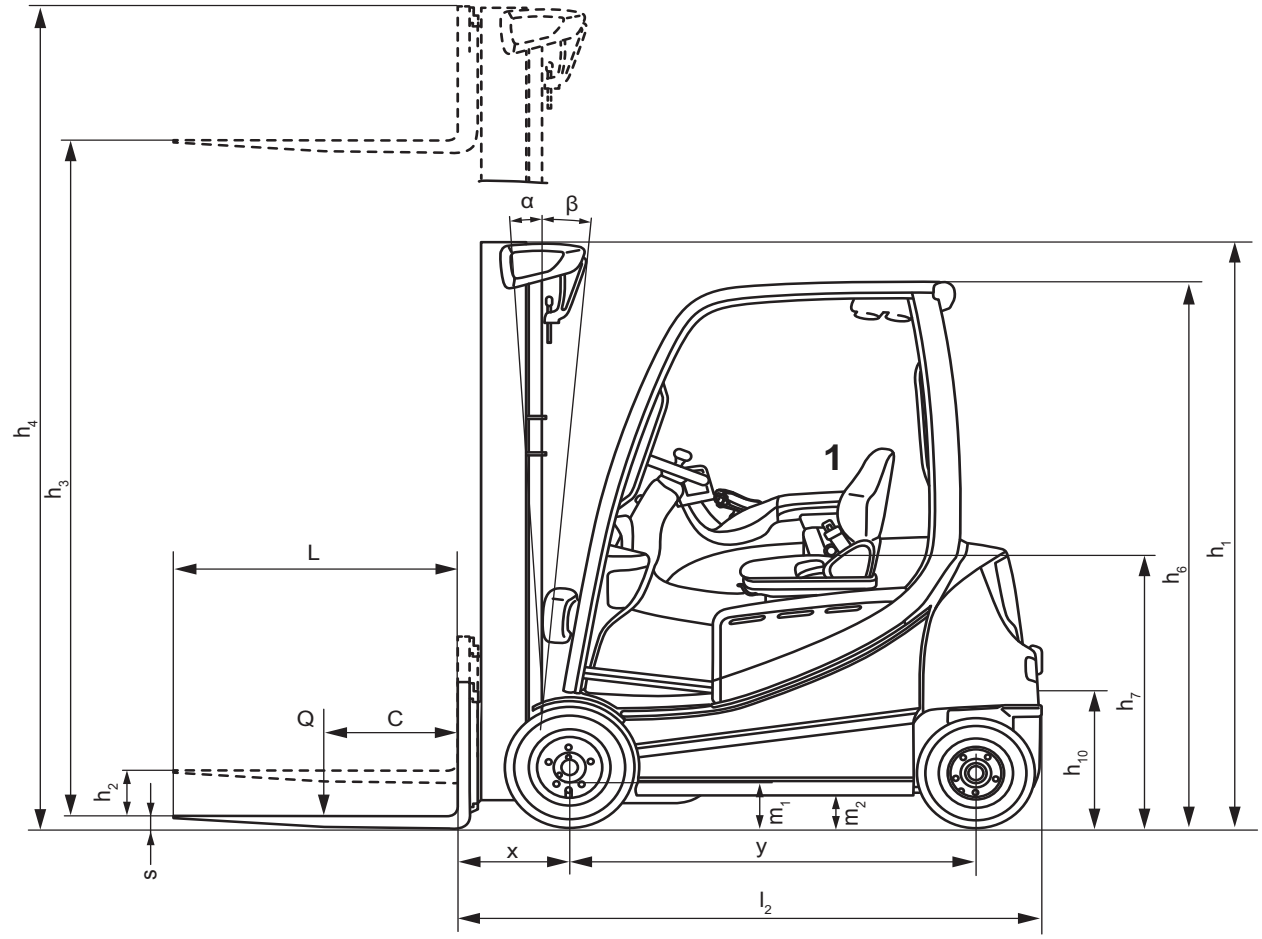

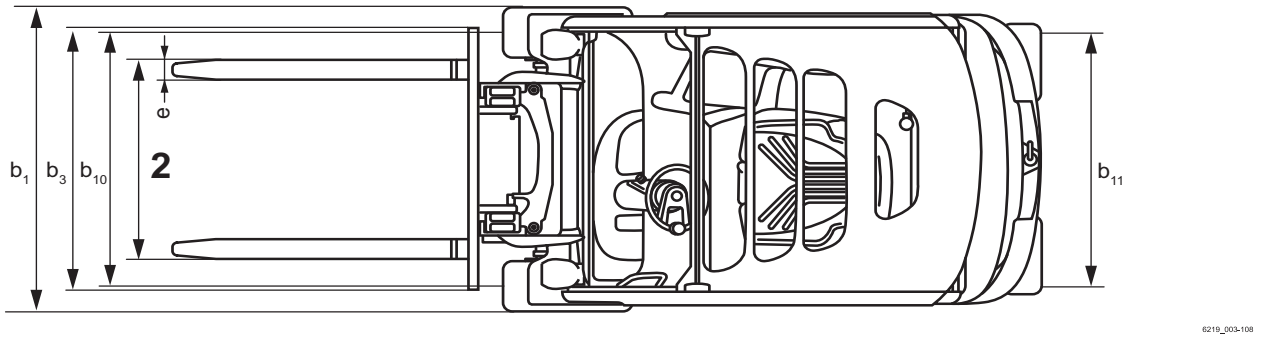

1 Seat is adjustable ± 90 mm

2 Fork spacing is adjustable

Dimensions

NOTE

Measurements h_1, h_3, h_4, h_6 and b_1 are customised and can be taken from the order confirmation.

VDI datasheet: RX20-14C with steering turntable

NOTE

This VDI datasheet specifies only the technical values for trucks with standard equipment. Different tyres, lift masts, additional units etc. can produce different values.

Key data

Model		RX20-14C
Type number		**6219**
Manufacturer		STILL GmbH
Drive		Electric
Operation		Seat
Rated capacity/load	Q (kg)	1400
Load centre of gravity distance	c (mm)	500
Load distance	x (mm)	374
Wheelbase	y (mm)	1319

Weights

Model		RX20-14C
Type number		**6219**
Net weight	kg	2926
Front axle load, laden	kg	3826
Rear axle load, laden	kg	500
Front axle load, unladen	kg	1498
Rear axle load, unladen	kg	1428

Wheels, chassis frame

Model		RX20-14C
Type number		**6219**
Tyres		Superelastic
Tyre size, front		180/70-8

VDI datasheet: RX20-14C with steering turntable

Model		RX20-14C
Type number		**6219**
Tyre size, rear		125/75-8
Number of front wheels (x = driven)		2x
Number of rear wheels (x = driven)		2
Track width, front	b_{10} (mm)	932
Track width, rear	b_{11} (mm)	168

Basic dimensions

Model		RX20-14C
Type number		**6219**
Forward tilt of lift mast/fork carriage	α (degrees)	5
Backwards tilt of lift mast/fork carriage	β (degrees)	6
Height with lift mast retracted	h_1 (mm)	2160
Free lift	h_2 (mm)	150
Lift	h_3 (mm)	3180
Height with lift mast extended	h_4 (mm)	3742
Height above overhead guard (cab)	h_6 (mm)	2035 (1949)
Seat height/standing height	h_7 (mm)	965
Coupling height	h_{10} (mm)	473
Overall length	l_1 (mm)	2661
Length including fork back	l_2 (mm)	1861
Overall width	b_1 (mm)	1099
Fork arm thickness	s (mm)	40
Fork arm width	e (mm)	80
Fork arm length	l (mm)	800
Fork carriage	Standard; class; form	ISO 2328 II A
Fork carriage width	b_3 (mm)	980
Ground clearance with load below lift mast	m_1 (mm)	≥ 90
Ground clearance at the middle of the wheelbase	m_2 (mm)	114

Model		RX20-14C
Type number		6219
Aisle width for pallet 1000 x 1200 crosswise	A_{st} (mm)	3186
Aisle width for pallet 800 x 1200 longitudinal	A_{st} (mm)	3311
Turning radius	W_a (mm)	1487
Smallest pivot point distance	b_{13} (mm)	—

Performance data

Model		RX20-14C
Type number		6219
Driving speed with load (Blue-Q/STILL Classic/sprint mode)	km/h	16/16/20
Driving speed without load (Blue-Q/STILL Classic/sprint mode)	km/h	16/16/20
Lifting speed with load (Blue-Q/STILL Classic/sprint mode)	m/s	0.54
Lifting speed without load (Blue-Q/STILL Classic/sprint mode)	m/s	0.75
Lowering speed with load	m/s	0.5
Lowering speed without load	m/s	0.5
Pulling force with load	N	5100
Pulling force without load	N	5100
Max. pulling force with load	N	12300
Max. pulling force without load	N	7700
Climbing capability with load	%	20.4
Climbing capability without load	%	24
Max. climbing capability with load	%	30.3
Max. climbing capability without load	%	27.9
Acceleration time with load (Blue-Q/STILL Classic/sprint mode)	s	5.7/5.4/5.1
Acceleration time without load (Blue-Q/STILL Classic/sprint mode)	s	5.4/5.1/4.8
Service brake		Electr./mech.

Gradients

The values specified in the "Performance data" table as the maximum climbing capability can be used only to compare the performance of forklift trucks in the same category. The specified values in no way represent the normal daily operating conditions.

⚠ WARNING

To use the truck safely – with or without a load – the maximum ascending or descending gradient permitted for travel is 15%.

– If you have any questions, contact your authorised service centre.

Electric motor

Model		RX20-14C
Type number		**6219**
Traction motor, power rating at S2: 60 min	kW	2x6.5
Lift motor, power rating at 20% ED	kW	11
Battery	Standard; circuit	DIN 43531 B
Battery voltage	U (V)	48
Battery capacity	K_5 (Ah)	625
Battery weight	kg	856

Miscellaneous

Model		RX20-14C
Type number		**6219**
Working pressure for attachments	bar	160
Oil flow for attachments	l/min	30
Sound pressure level L_{pAZ} (Driver's compartment)	dB (A)	< 66
Human vibration: acceleration according to EN 13059	m/s^2	< 0.6
Tow coupling, DIN type/model		Bolt

VDI datasheet: RX20-16 with steering turntable

NOTE

This VDI datasheet specifies only the technical values for trucks with standard equipment. Different tyres, lift masts, additional units etc. can produce different values.

Key data

Model		RX20-16C	RX20-16	RX20-16L
Type number		**6220**	**6221**	**6222**
Manufacturer		STILL GmbH	STILL GmbH	STILL GmbH
Drive		Electric	Electric	Electric
Operation		Seat	Seat	Seat
Rated capacity/load	Q (kg)	1600	1600	1600
Load centre of gravity distance	c (mm)	500	500	500
Load distance	x (mm)	374	374	374
Wheelbase	y (mm)	1319	1409	1517

Weights

Model		RX20-16C	RX20-16	RX20-16L
Type number		**6220**	**6221**	**6222**
Net weight	kg	3125	3057	3127
Front axle load, laden	kg	4160	4112	4133
Rear axle load, laden	kg	565	545	594
Front axle load, unladen	kg	1500	1520	1611
Rear axle load, unladen	kg	1625	1537	1516

Wheels, chassis frame

Model		RX20-16C	RX20-16	RX20-16L
Type number		**6220**	**6221**	**6222**
Tyres		Superelastic	Superelastic	Superelastic
Tyre size, front		180/70-8	180/70-8	180/70-8

VDI datasheet: RX20-16 with steering turntable

Model		RX20-16C	RX20-16	RX20-16L
Type number		**6220**	**6221**	**6222**
Tyre size, rear		125/75-8	125/75-8	125/75-8
Number of front wheels (x = driven)		2x	2x	2x
Number of rear wheels (x = driven)		2	2	2
Track width, front	b_{10} (mm)	932	932	932
Track width, rear	b_{11} (mm)	168	168	168

Basic dimensions

Model		RX20-16C	RX20-16	RX20-16L
Type number		**6220**	**6221**	**6222**
Forward tilt of lift mast/fork carriage	α (degrees)	5	5	5
Backwards tilt of lift mast/fork carriage	β (degrees)	6	6	6
Height with lift mast retracted	h_1 (mm)	2160	2160	2160
Free lift	h_2 (mm)	150	150	150
Lift	h_3 (mm)	3180	3180	3180
Height with lift mast extended	h_4 (mm)	3742	3742	3742
Height above overhead guard (cab)	h_6 (mm)	2035 (1949)	2035 (1949)	2035 (1949)
Seat height/standing height	h_7 (mm)	965	965	965
Coupling height	h_{10} (mm)	473	473	473
Overall length	l_1 (mm)	2661	2744	2852
Length including fork back	l_2 (mm)	1861	1944	2052
Overall width	b_1 (mm)	1099	1099	1099
Fork arm thickness	s (mm)	40	40	40
Fork arm width	e (mm)	80	80	80
Fork arm length	l (mm)	800	800	800
Fork carriage	Standard; class; form	ISO 2328 II A	ISO 2328 II A	ISO 2328 II A
Fork carriage width	b_3 (mm)	980	980	980
Ground clearance with load below lift mast	m_1 (mm)	≥ 90	≥ 90	≥ 90
Ground clearance at the middle of the wheelbase	m_2 (mm)	114	114	114

Model		RX20-16C	RX20-16	RX20-16L
Type number		6220	6221	6222
Aisle width for pallet 1000 x 1200 crosswise	A_{st} (mm)	3186	3269	3377
Aisle width for pallet 800 x 1200 longitudinal	A_{st} (mm)	3311	3394	3502
Turning radius	W_a (mm)	1487	1570	1678
Smallest pivot point distance	b_{13} (mm)	—	—	—

Performance data

Model		RX20-16C	RX20-16	RX20-16L
Type number		6220	6221	6222
Driving speed with load (Blue-Q/STILL Classic/sprint mode)	km/h	16/16/20	16/16/20	16/16/20
Driving speed without load (Blue-Q/STILL Classic/sprint mode)	km/h	16/16/20	16/16/20	16/16/20
Lifting speed with load (Blue-Q/STILL Classic/sprint mode)	m/s	0.53	0.53	0.53
Lifting speed without load (Blue-Q/STILL Classic/sprint mode)	m/s	0.75	0.75	0.75
Lowering speed with load	m/s	0.51	0.51	0.51
Lowering speed without load	m/s	0.5	0.5	0.5
Pulling force with load	N	5100	5100	5100
Pulling force without load	N	5200	5200	5200
Max. pulling force with load	N	12300	12,300	12,300
Max. pulling force without load	N	7700	7900	8500
Climbing capability with load	%	18.6	18.6	18.6
Climbing capability without load	%	24	24	24
Max. climbing capability with load	%	27.6	28	27.4
Max. climbing capability without load	%	26	27.4	28.7
Acceleration time with load (Blue-Q/STILL Classic/sprint mode)	s	5.7/5.4/5.1	5.7/5.4/5.1	5.7/5.4/5.1
Acceleration time without load (Blue-Q/STILL Classic/sprint mode)	s	5.4/5.1/4.8	5.4/5.1/4.8	5.4/5.1/4.8
Service brake		Electr. / mech.	Electr. / mech.	Electr. / mech.

Gradients

The values specified in the "Performance data" table as the maximum climbing capability can be used only to compare the performance of forklift trucks in the same category. The specified values in no way represent the normal daily operating conditions.

⚠ WARNING

To use the truck safely – with or without a load – the maximum ascending or descending gradient permitted for travel is 15%.

– If you have any questions, contact your authorised service centre.

Electric motor

Model		RX20-16C	RX20-16	RX20-16L
Type number		**6220**	**6221**	**6222**
Traction motor, power rating at S2: 60 min	kW	2x6.5	2x6.5	2x6.5
Lift motor, power rating at S3: 15%	kW	11	11	11
Battery	Standard; circuit	DIN 43531 B	DIN 43531 B	DIN 43531 B
Battery voltage	U (V)	48	48	48
Battery capacity	K_5 (Ah)	625	625	750
Battery weight	kg	856	855	1013

Miscellaneous

Model		RX20-16C	RX20-16	RX20-16L
Type number		**6220**	**6221**	**6222**
Working pressure for attachments	bar	160	160	160
Oil flow for attachments	l/min	30	30	30
Sound pressure level L_{pAZ} (Driver's compartment)	dB (A)	< 66	< 66	< 66
Human vibration: acceleration according to EN 13059	m/s^2	< 0.6	< 0.6	< 0.6
Tow coupling, DIN type/model		Bolt	Bolt	Bolt

VDI datasheet: RX20-18 and RX20-20 with steering turntable

NOTE

This VDI datasheet specifies only the technical values for trucks with standard equipment. Different tyres, lift masts, additional units etc. can produce different values.

Key data

Model		RX20-18	RX20-18L	RX20-20L
Type number		**6223**	**6224**	**6225**
Manufacturer		STILL GmbH	STILL GmbH	STILL GmbH
Drive		Electric	Electric	Electric
Operation		Seat	Seat	Seat
Rated capacity/load	Q (kg)	1800	1800	2000
Load centre of gravity distance	c (mm)	500	500	500
Load distance	x (mm)	374	374	388
Wheelbase	y (mm)	1409	1517	1517

Weights

Model		RX20-18	RX20-18L	RX20-20L
Type number		**6223**	**6224**	**6225**
Net weight	kg	3231	3419	3486
Front axle load, laden	kg	4440	4450	4860
Rear axle load, laden	kg	590	769	623
Front axle load, unladen	kg	1524	1612	1689
Rear axle load, unladen	kg	1707	1806	1794

VDI datasheet: RX20-18 and RX20-20 with steering turntable

Wheels, chassis frame

Model		RX20-18	RX20-18L	RX20-20L
Type number		**6223**	**6224**	**6225**
Tyres		Superelastic	Superelastic	Superelastic
Tyre size, front		200/50-10	200/50-10	200/50-10
Tyre size, rear		140/55-9	140/55-9	140/55-9
Number of front wheels (x = driven)		2x	2x	2x
Number of rear wheels (x = driven)		2	2	2
Track width, front	b_{10} (mm)	942	942	942
Track width, rear	b_{11} (mm)	172	172	172

Basic dimensions

Model		RX20-18	RX20-18L	RX20-20L
Type number		**6223**	**6224**	**6225**
Forward tilt of lift mast/fork carriage	α (degrees)	5	5	5
Backwards tilt of lift mast/fork carriage	β (degrees)	6	6	6
Height with lift mast retracted	h_1 (mm)	2160	2160	2160
Free lift	h_2 (mm)	150	150	150
Lift	h_3 (mm)	3180	3180	3180
Height with lift mast extended	h_4 (mm)	3742	3742	3742
Height above overhead guard (cab)	h_6 (mm)	2035 (1949)	2035 (1949)	2035 (1949)
Seat height/standing height	h_7 (mm)	965	965	965
Coupling height	h_{10} (mm)	473	473	473
Overall length	l_1 (mm)	2744	2852	2866
Length including fork back	l_2 (mm)	1944	2052	2066
Overall width	b_1 (mm)	1149	1149	1149
Fork arm thickness	s (mm)	40	40	40
Fork arm width	e (mm)	80	80	80
Fork arm length	l (mm)	800	800	800
Fork carriage	Standard; class; form	ISO 2328 II A	ISO 2328 II A	ISO 2328 II A

Model		RX20-18	RX20-18L	RX20-20L
Type number		**6223**	**6224**	**6225**
Fork carriage width	b_3 (mm)	980	980	980
Ground clearance with load below lift mast	m_1 (mm)	≥ 90	≥ 90	≥ 90
Ground clearance at the middle of the wheelbase	m_2 (mm)	114	114	114
Aisle width for pallet 1000 x 1200 crosswise	A_{st} (mm)	3269	3377	3390
Aisle width for pallet 800 x 1200 longitudinal	A_{st} (mm)	3269	3377	3390
Turning radius	W_a (mm)	1570	1678	1678
Smallest pivot point distance	b_{13} (mm)	—	—	—

Performance data

Model		RX20-18	RX20-18L	RX20-20L
Type number		**6223**	**6224**	**6225**
Driving speed with load (Blue-Q/STILL Classic/sprint mode)	km/h	16/16/20	16/16/20	16/16/20
Driving speed without load (Blue-Q/STILL Classic/sprint mode)	km/h	16/16/20	16/16/20	16/16/20
Lifting speed with load (Blue-Q/STILL Classic/sprint mode)	m/s	0.52	0.52	0.45
Lifting speed without load (Blue-Q/STILL Classic/sprint mode)	m/s	0.75	0.75	0.63
Lowering speed with load	m/s	0.52	0.52	0.48
Lowering speed without load	m/s	0.5	0.5	0.41
Pulling force with load	N	4900	4800	4800
Pulling force without load	N	5100	5100	5000
Max. pulling force with load	N	12000	12000	11900
Max. pulling force without load	N	7900	8500	8700
Climbing capability with load	%	18.6	18.6	15
Climbing capability without load	%	24	24	18.1
Max. climbing capability with load	%	25.1	25.3	23
Max. climbing capability without load	%	26	28.3	27
Acceleration time with load (Blue-Q/STILL Classic/sprint mode)	s	5.8/5.5/5.2	5.8/5.5/5.2	5.8/5.5/5.3

VDI datasheet: RX20-18 and RX20-20 with steering turntable

Model		RX20-18	RX20-18L	RX20-20L
Type number		6223	6224	6225
Acceleration time without load (Blue-Q/STILL Classic/sprint mode)	s	5.4/5.1/4.8	5.4/5.1/4.8	5.4/5.1/4.8
Service brake		Electr. / mech.	Electr. / mech.	Electr. / mech.

Gradients

The values specified in the "Performance data" table as the maximum climbing capability can be used only to compare the performance of forklift trucks in the same category. The specified values in no way represent the normal daily operating conditions.

⚠ WARNING

To use the truck safely – with or without a load – the maximum ascending or descending gradient permitted for travel is 15%.

– If you have any questions, contact your authorised service centre.

Electric motor

Model		RX20-18	RX20-18L	RX20-20L
Type number		6223	6224	6225
Traction motor, power rating at S2: 60 min	kW	2x6.5	2x6.5	2x6.5
Lift motor, power rating at S3: 15%	kW	11	11	11
Battery	Standard; circuit	DIN 43531 A (B)	DIN 43531 A	DIN 43531 A (B)
Battery voltage	U (V)	48	48	48
Battery capacity	K_5 (Ah)	625	750	750
Battery weight	kg	855	1013	1013

Miscellaneous

Model		RX20-18	RX20-18L	RX20-20L
Type number		6223	6224	6225
Working pressure for attachments	bar	160	160	160
Oil flow for attachments	l/min	30	30	30

VDI datasheet: RX20-18 and RX20-20 with steering turntable

Model		RX20-18	RX20-18L	RX20-20L
Type number		**6223**	**6224**	**6225**
Sound pressure level L_{pAZ} (Driver's compartment)	dB (A)	< 66	< 66	< 66
Human vibration: acceleration according to EN 13059	m/s^2	< 0.6	< 0.6	< 0.6
Tow coupling, DIN type/model		Bolt	Bolt	Bolt

VDI datasheet: RX20-16 with swing axle

NOTE

This VDI datasheet specifies only the technical values for trucks with standard equipment. Different tyres, lift masts, additional units etc. can produce different values.

Key data

Model		RX20-16P	RX20-16PL
Type number		**6226**	**6227**
Manufacturer		STILL GmbH	STILL GmbH
Drive		Electric	Electric
Operation		Seat	Seat
Rated capacity/load	Q (kg)	1600	1600
Load centre of gravity distance	c (mm)	500	500
Load distance	x (mm)	374	374
Wheelbase	y (mm)	1429	1537

Weights

Model		RX20-16P	RX20-16PL
Type number		**6226**	**6227**
Net weight	kg	3018	3178
Front axle load, laden	kg	4098	4121
Rear axle load, laden	kg	520	657
Front axle load, unladen	kg	1520	1612
Rear axle load, unladen	kg	1498	1567

Wheels, chassis frame

Model		RX20-16P	RX20-16PL
Type number		**6226**	**6227**
Tyres		Superelastic	Superelastic
Tyre size, front		180/70-8	180/70-8

Model		RX20-16P	RX20-16PL
Type number		**6226**	**6227**
Tyre size, rear		150/75-8	150/75-8
Number of front wheels (x = driven)		2x	2x
Number of rear wheels (x = driven)		2	2
Track width, front	b_{10} (mm)	932	932
Track width, rear	b_{11} (mm)	807	807

Basic dimensions

Model		RX20-16P	RX20-16PL
Type number		**6226**	**6227**
Forward tilt of lift mast/fork carriage	α (degrees)	5	5
Backwards tilt of lift mast/fork carriage	β (degrees)	6	6
Height with lift mast retracted	h_1 (mm)	2160	2160
Free lift	h_2 (mm)	150	150
Lift	h_3 (mm)	3180	3180
Height with lift mast extended	h_4 (mm)	3742	3742
Height above overhead guard (cab)	h_6 (mm)	2035 (1949)	2035 (1949)
Seat height/standing height	h_7 (mm)	965	965
Coupling height	h_{10} (mm)	537	537
Overall length	l_1 (mm)	2837	2945
Length including fork back	l_2 (mm)	2037	2145
Overall width	b_1 (mm)	1099	1099
Fork arm thickness	s (mm)	40	40
Fork arm width	e (mm)	80	80
Fork arm length	l (mm)	800	800
Fork carriage	Standard; class; form	ISO 2328 II A	ISO 2328 II A
Fork carriage width	b_3 (mm)	980	980
Ground clearance with load below lift mast	m_1 (mm)	≥ 90	≥ 90
Ground clearance at the middle of the wheelbase	m_2 (mm)	114	114

VDI datasheet: RX20-16 with swing axle

Model		RX20-16P	RX20-16PL
Type number		6226	6227
Aisle width for pallet 1000 x 1200 crosswise	A_{st} (mm)	3362	3470
Aisle width for pallet 800 x 1200 longitudinal	A_{st} (mm)	3487	3595
Turning radius	W_a (mm)	1663	1771
Smallest pivot point distance	b_{13} (mm)	—	—

Performance data

Model		RX20-16P	RX20-16PL
Type number		6226	6227
Driving speed with load (Blue-Q/STILL Classic/sprint mode)	km/h	16/16/20	16/16/20
Driving speed without load (Blue-Q/STILL Classic/sprint mode)	km/h	16/16/20	16/16/20
Lifting speed with load (Blue-Q/STILL Classic/sprint mode)	m/s	0.53	0.53
Lifting speed without load (Blue-Q/STILL Classic/sprint mode)	m/s	0.75	0.75
Lowering speed with load	m/s	0.51	0.51
Lowering speed without load	m/s	0.5	0.5
Pulling force with load	N	5000	5000
Pulling force without load	N	5100	5100
Max. pulling force with load	N	12300	12,300
Max. pulling force without load	N	7900	8500
Climbing capability with load	%	18.6	18.6
Climbing capability without load	%	24	24
Max. climbing capability with load	%	27.8	27.6
Max. climbing capability without load	%	27.8	28.9
Acceleration time with load (Blue-Q/STILL Classic/sprint mode)	s	5.7/5.4/5.1	5.7/5.4/5.1
Acceleration time without load (Blue-Q/STILL Classic/sprint mode)	s	5.4/5.1/4.8	5.4/5.1/4.8
Service brake		Electr. / mech.	Electr. / mech.

Gradients

The values specified in the "Performance data" table as the maximum climbing capability can be used only to compare the performance of forklift trucks in the same category. The specified values in no way represent the normal daily operating conditions.

⚠ WARNING

To use the truck safely – with or without a load – the maximum ascending or descending gradient permitted for travel is 15%.

– If you have any questions, contact your authorised service centre.

Electric motor

Model		RX20-16P	RX20-16PL
Type number		**6226**	**6227**
Traction motor, power rating at S2: 60 min	kW	2x6.5	2x6.5
Lift motor, power rating at S3: 15%	kW	11	11
Battery	Standard; circuit	DIN 43531 A (B)	DIN 43531 A
Battery voltage	U (V)	48	48
Battery capacity	K_5 (Ah)	625	750
Battery weight	kg	855	1013

Miscellaneous

Model		RX20-16P	RX20-16PL
Type number		**6226**	**6227**
Working pressure for attachments	bar	160	160
Oil flow for attachments	l/min	30	30
Sound pressure level L_{pAZ} (Driver's compartment)	dB (A)	< 66	< 66
Human vibration: acceleration according to EN 13059	m/s^2	< 0.6	< 0.6
Tow coupling, DIN type/model		Bolt	Bolt

VDI datasheet: RX20-18 with swing axle

NOTE

This VDI datasheet specifies only the technical values for trucks with standard equipment. Different tyres, lift masts, additional units etc. can produce different values.

Key data

Model		RX20-18P	RX20-18PL
Type number		**6228**	**6229**
Manufacturer		STILL GmbH	STILL GmbH
Drive		Electric	Electric
Operation		Seat	Seat
Rated capacity/load	Q (kg)	1800	1800
Load centre of gravity distance	c (mm)	500	500
Load distance	x (mm)	374	374
Wheelbase	y (mm)	1429	1537

Weights

Model		RX20-18P	RX20-18PL
Type number		**6228**	**6229**
Net weight	kg	3254	3178
Front axle load, laden	kg	4439	4435
Rear axle load, laden	kg	616	543
Front axle load, unladen	kg	1538	1612
Rear axle load, unladen	kg	1717	1567

Wheels, chassis frame

Model		RX20-18P	RX20-18PL
Type number		**6228**	**6229**
Tyres		Superelastic	Superelastic
Tyre size, front		200/50-10	200/50-10

Model		RX20-18P	RX20-18PL
Type number		**6228**	**6229**
Tyre size, rear		150/75-8	150/75-8
Number of front wheels (x = driven)		2x	2x
Number of rear wheels (x = driven)		2	2
Track width, front	b_{10} (mm)	942	942
Track width, rear	b_{11} (mm)	807	807

Basic dimensions

Model		RX20-18P	RX20-18PL
Type number		**6228**	**6229**
Forward tilt of lift mast/fork carriage	α (degrees)	5	5
Backwards tilt of lift mast/fork carriage	β (degrees)	6	6
Height with lift mast retracted	h_1 (mm)	2160	2160
Free lift	h_2 (mm)	150	150
Lift	h_3 (mm)	3180	3180
Height with lift mast extended	h_4 (mm)	3742	3742
Height above overhead guard (cab)	h_6 (mm)	2035 (1949)	2035 (1949)
Seat height/standing height	h_7 (mm)	965	965
Coupling height	h_{10} (mm)	537	537
Overall length	l_1 (mm)	2837	2945
Length including fork back	l_2 (mm)	2037	2145
Overall width	b_1 (mm)	1149	1149
Fork arm thickness	s (mm)	40	40
Fork arm width	e (mm)	80	80
Fork arm length	l (mm)	800	800
Fork carriage	Standard; class; form	ISO 2328 II A	ISO 2328 II A
Fork carriage width	b_3 (mm)	980	980
Ground clearance with load below lift mast	m_1 (mm)	≥ 90	≥ 90
Ground clearance at the middle of the wheelbase	m_2 (mm)	114	114

VDI datasheet: RX20-18 with swing axle

Model		RX20-18P	RX20-18PL
Type number		6228	6229
Aisle width for pallet 1000 x 1200 crosswise	A_{st} (mm)	3362	3470
Aisle width for pallet 800 x 1200 longitudinal	A_{st} (mm)	3487	3595
Turning radius	W_a (mm)	1663	1771
Smallest pivot point distance	b_{13} (mm)	—	—

Performance data

Model		RX20-18P	RX20-18PL
Type number		6228	6229
Driving speed with load (Blue-Q/STILL Classic/sprint mode)	km/h	16/16/20	16/16/20
Driving speed without load (Blue-Q/STILL Classic/sprint mode)	km/h	16/16/20	16/16/20
Lifting speed with load (Blue-Q/STILL Classic/sprint mode)	m/s	0.52	0.52
Lifting speed without load (Blue-Q/STILL Classic/sprint mode)	m/s	0.75	0.75
Lowering speed with load	m/s	0.52	0.52
Lowering speed without load	m/s	0.5	0.5
Pulling force with load	N	4800	4800
Pulling force without load	N	5000	5100
Max. pulling force with load	N	11900	12000
Max. pulling force without load	N	8000	8500
Climbing capability with load	%	18.6	18.6
Climbing capability without load	%	24	24
Max. Climbing capability with load	%	24.8	25.4
Max. climbing capability without load	%	26	28.6
Acceleration time with load (Blue-Q/STILL Classic/sprint mode)	s	5.8/5.5/5.2	5.8/5.5/5.2
Acceleration time without load (Blue-Q/STILL Classic/sprint mode)	s	5.4/5.1/4.8	5.4/5.1/4.8
Service brake		Electr. / mech.	Electr. / mech.

Gradients

The values specified in the "Performance data" table as the maximum climbing capability can be used only to compare the performance of forklift trucks in the same category. The specified values in no way represent the normal daily operating conditions.

⚠ WARNING

To use the truck safely – with or without a load – the maximum ascending or descending gradient permitted for travel is 15%.

– If you have any questions, contact your authorised service centre.

Electric motor

Model		RX20-18P	RX20-18PL
Type number		**6228**	**6229**
Traction motor, power rating at S2: 60 min	kW	2x6.5	2x6.5
Lift motor, power rating at S3: 15%	kW	11	11
Battery	Standard; circuit	DIN 43531 A (B)	DIN 43531 A
Battery voltage	U (V)	48	48
Battery capacity	K_5 (Ah)	625	750
Battery weight	kg	855	1013

Miscellaneous

Model		RX20-18P	RX20-18PL
Type number		**6228**	**6229**
Working pressure for attachments	bar	160	160
Oil flow for attachments	l/min	30	30
Sound pressure level L_{pAZ} (Driver's compartment)	dB (A)	< 66	< 66
Human vibration: acceleration according to EN 13059	m/s^2	< 0.6	< 0.6
Tow coupling, DIN type/model		Bolt	Bolt

RX20-20 swing axle VDI datasheet

NOTE

This VDI datasheet specifies only the technical values for trucks with standard equipment. Different tyres, lift masts, additional units etc. can produce different values.

Key data

Model		RX20-20P	RX20-20PL
Type number		**6230**	**6231**
Manufacturer		STILL GmbH	STILL GmbH
Drive		Electric	Electric
Operation		Seat	Seat
Rated capacity/load	Q (kg)	2000	2000
Load centre of gravity distance	c (mm)	500	500
Load distance	x (mm)	388	388
Wheelbase	y (mm)	1429	1537

Weights

Model		RX20-20P	RX20-20PL
Type number		**6230**	**6231**
Net weight	kg	3474	3449
Front axle load, laden	kg	4858	4851
Rear axle load, laden	kg	616	598
Front axle load, unladen	kg	1616	1696
Rear axle load, unladen	kg	1858	1754

Wheels, chassis frame

Model		RX20-20P	RX20-20PL
Type number		**6230**	**6231**
Tyres		Superelastic	Superelastic
Tyre size, front		200/50-10	200/50-10

Model		RX20-20P	RX20-20PL
Type number		**6230**	**6231**
Tyre size, rear		150/75-8	150/75-8
Number of front wheels (x = driven)		2x	2x
Number of rear wheels (x = driven)		2	2
Track width, front	b_{10} (mm)	942	942
Track width, rear	b_{11} (mm)	807	807

Basic dimensions

Model		RX20-20P	RX20-20PL
Type number		**6230**	**6231**
Forward tilt of lift mast/fork carriage	α (degrees)	5	5
Backwards tilt of lift mast/fork carriage	β (degrees)	6	6
Height with lift mast retracted	h_1 (mm)	2160	2160
Free lift	h_2 (mm)	150	150
Lift	h_3 (mm)	3180	3180
Height with lift mast extended	h_4 (mm)	3742	3742
Height above overhead guard (cab)	h_6 (mm)	2035 (1949)	2035 (1949)
Seat height/standing height	h_7 (mm)	965	965
Coupling height	h_{10} (mm)	537	537
Overall length	l_1 (mm)	2851	2959
Length including fork back	l_2 (mm)	2051	2159
Overall width	b_1 (mm)	1149	1149
Fork arm thickness	s (mm)	40	40
Fork arm width	e (mm)	80	80
Fork arm length	l (mm)	800	800
Fork carriage	Standard; class; form	ISO 2328 II A	ISO 2328 II A
Fork carriage width	b_3 (mm)	980	980
Ground clearance with load below lift mast	m_1 (mm)	≥ 90	≥ 90
Ground clearance at the middle of the wheelbase	m_2 (mm)	114	114

RX20-20 swing axle VDI datasheet

Model		RX20-20P	RX20-20PL
Type number		6230	6231
Aisle width for pallet 1000 x 1200 crosswise	A_{st} (mm)	3375	3483
Aisle width for pallet 800 x 1200 longitudinal	A_{st} (mm)	3501	3609
Turning radius	W_a (mm)	1663	1771
Smallest pivot point distance	b_{13} (mm)	—	—

Performance data

Model		RX20-20P	RX20-20PL
Type number		6230	6231
Driving speed with load (Blue-Q/STILL Classic/sprint mode)	km/h	16/16/20	16/16/20
Driving speed without load (Blue-Q/STILL Classic/sprint mode)	km/h	16/16/20	16/16/20
Lifting speed with load (Blue-Q/STILL Classic/sprint mode)	m/s	0.45	0.45
Lifting speed without load (Blue-Q/STILL Classic/sprint mode)	m/s	0.63	0.63
Lowering speed with load	m/s	0.48	0.48
Lowering speed without load	m/s	0.41	0.41
Pulling force with load	N	4700	4800
Pulling force without load	N	5000	5000
Max. pulling force with load	N	11900	11900
Max. pulling force without load	N	8200	8800
Climbing capability with load	%	15	15
Climbing capability without load	%	18.1	18.1
Max. climbing capability with load	%	22.9	23.1
Max. climbing capability without load	%	25.1	27.2
Acceleration time with load (Blue-Q/STILL Classic/sprint mode)	s	5.8/5.5/5.3	5.8/5.5/5.3
Acceleration time without load (Blue-Q/STILL Classic/sprint mode)	s	5.4/5.1/4.8	5.4/5.1/4.8
Service brake		Electr. / mech.	Electr. / mech.

Gradients

The values specified in the "Performance data" table as the maximum climbing capability can be used only to compare the performance of forklift trucks in the same category. The specified values in no way represent the normal daily operating conditions.

⚠ WARNING

To use the truck safely – with or without a load – the maximum ascending or descending gradient permitted for travel is 15%.

– If you have any questions, contact your authorised service centre.

Electric motor

Model		RX20-20P	RX20-20PL
Type number		**6230**	**6231**
Traction motor, power rating at S2: 60 min	kW	2x6.5	2x6.5
Lift motor, power rating at S3: 15%	kW	11	11
Battery	Standard; circuit	DIN 43531 A (B)	DIN 43531 A
Battery voltage	U (V)	48	48
Battery capacity	K_5 (Ah)	625	750
Battery weight	kg	855	1013

Miscellaneous

Model		RX20-20P	RX20-20PL
Type number		**6230**	**6231**
Working pressure for attachments	bar	160	160
Oil flow for attachments	l/min	30	30
Sound pressure level L_{pAZ} (Driver's compartment)	dB (A)	< 66	< 66
Human vibration: acceleration according to EN 13059	m/s^2	< 0.6	< 0.6
Tow coupling, DIN type/model		Bolt	Bolt

Battery specifications for lead-acid batteries

⚠ CAUTION

The battery weight and the battery dimensions affect the stability of the truck.

When replacing the battery, the weight ratios must not be changed. The battery weight must remain within the weight range specified on the nameplate. The location of ballast weights must not be changed. The bottom of the battery tray must be closed.

- Use batteries that meet DIN standards.
- Do not change the position of ballast weights.
- Check the battery weight against the information on the nameplate.
- Only use a battery tray that is closed at the bottom.

NOTE

Battery specifications according to DIN 43531; cells in accordance with DIN EN 60254-2, 48 V circuit A or 48 V circuit B

- The battery weight can be found on the nameplate of the battery.

Lead-acid batteries

Battery designation	Capacity [Ah]	Circuit	Weight/ ballast weight [kg]	Battery compartment dimensions [mm]			Tray
				Length	Width	Height	
4PzV 400	400	A	708/ 155	830	522	627	364
4PzV 440	440						
4PzS 460	460						
4PzS 500	500						
5PzV 500	500	A	856	830	630	627	365
5PzV 550	550						
5PzS 575	575						
5PzS 625	625						

Battery designation	Capacity [Ah]	Circuit	Weight/ ballast weight [kg]	Battery compartment dimensions [mm]			Tray
				Length	Width	Height	
6PzV 600	600	A	1064	830	738	627	366
6PzV 660	660						
6PzS 690	690						
6PzS 750	750						
5TCSM 660	660	B[1]	856	1030	529	627	315
5PzV 500	500						
5PzV 550	550						
5PzS 575	575						
5PzS 625	650						

NOTE

When converting to TENSOR® batteries, the maximum speed of the truck must be limited to 17 km/h for technical reasons. Contact the authorised service centre regarding this matter.

[1] In some trucks, an adapter plate is required to support the battery and circuit B.

Battery specifications for lithium-ion batteries

– For more information, please refer to the nameplate and the operating instructions for the lithium-ion battery.

GGS Li-ion, 48 V (BG 2)[2]
13.1 kWh and 49 kWh

	Battery group 2.1	Battery group 2.2
Nominal voltage [V]	48.75	48.75
Nominal capacity [Ah]	625	625
Nominal energy [kWh]	13.1	49
Cell connections	13 serial, 4 parallel	13 serial, 15 parallel
Length [mm]	1030	1030
Width [mm]	529	529
Height [mm]	410	627
Weight [kg]	856	856
Tray	500	501

GGS Li-ion, 48 V (BG 8)
16.3 kWh and 45.7 kWh

	Battery group 8.1	Battery group 8.2
Nominal voltage [V]	48.75	48.75
Nominal capacity [Ah]	625	625
Nominal energy [kWh]	16.3	45.7
Cell connections	13 serial, 5 parallel	13 serial, 14 parallel
Length [mm]	830	830
Width [mm]	630	630
Height [mm]	627	627
Weight [kg]	856	856
Tray	510	510

[2] In some trucks, an adapter plate is required to support the BG 2 lithium-ion battery.

GGS Li-ion, 48 V (BG 9)
16.3 kWh and 49 kWh

	Battery group 9.1	Battery group 9.2
Nominal voltage [V]	48.75	48.75
Nominal capacity [Ah]	750	750
Nominal energy [kWh]	16.3	49
Cell connections	13 serial, 6 parallel	13 serial, 16 parallel
Length [mm]	830	830
Width [mm]	738	738
Height [mm]	627	627
Weight [kg]	1013	1013
Tray	511	511

Index

A

Access authorisation for the fleet manager 100
Access authorisation with PIN code 99
Accessories 8
Actuating the drive direction switch
- Fingertip version 123
- Joystick 4Plus version 123
- Mini-console version 124
- Mini-lever version 122
- Multiple-lever version 122

Address of manufacturer I
Adjusting the armrest 86
Adjusting the fork 177
Adjusting the steering column 87
Air conditioning 254

Attachments
- Alternating operation 205
- Assembly 204
- Connection 206
- Controlling using a double mini-lever 218
- Controlling using a quadruple mini-lever 225
- Controlling using a triple mini-lever . . 222
- Controlling using multi-lever operation 214
- Controlling using the double mini-lever and the 5th function . . 220
- Controlling using the joystick 4Plus . 232
- Controlling using the quadruple mini-lever and the 5th function . . 227
- Controlling using the triple mini-lever and the 5th function . . 223
- Controlling with multi-lever operation and the 5th function . . . 216
- Controlling with multi-lever operation and the 6th function . . . 216
- Controlling with the fingertip 228
- Controlling with the fingertip and the 5th function 230
- Depressurising the connections 207
- General controlling 212
- Load capacity 206
- Mounting 206
- Picking up a load 238
- Safety information 204
- Special risks 44

Automatic mast vertical positioning
- Checking for correct function 95
- Operation 194

B

Battery
- Changing the battery type 311
- Changing to lithium-ion batteries . . . 312
- Charging 294
- Charging to equalise 297
- Checking 373
- Checking condition, acid level and acid density 292
- Checking the changeover frame . . . 381
- Checking the charge status of the . . 293
- Checking the interlock 366
- Disposal 26
- Maintaining 290
- Safety regulations 287

Battery acid 54

Battery door
- Checking the interlock 366

Battery male connector
- Connecting 285
- Disconnecting 286

Battery specifications
- Lead-acid batteries 412
- Lithium-ion batteries 414

Before picking up a load 175

Blue-Q
- Effects on additional consumers . . . 108
- Functional description 108
- Switching on and off 110

C

Cab
- Opening/closing the door 249
- Opening/closing the side window . . . 250
- Operating the rear window heating . . 242
- Turning the interior lighting on or off . 250

CE labelling 6

Ceiling sensor 243

Changes to the truck 35

Changing the fork arms 166

Changing to lithium-ion batteries 312

Charging the lithium-ion battery 307

Checking the charge state of the lithium-ion battery 305

Checking the charge status of the 293

Checking the double pedal 381

Checking the driver's seat 368

Checking the emergency off function . . . 88

Checking the fork arms 380

Checking the lift cylinders and connections for leaks 379

Checking wheel fastenings 372

Clamp locking mechanism
- Releasing 235

Clean the truck
- After cleaning 341

Cleaning the electrical system 339

Cleaning the truck 337

Cleaning the windows 341

Climbing into the truck 77

Climbing out of the truck 77

Clipboard 255

Cold store application 265
- Batteries 267
- Operation 266
- Types of application 265

Commissioning 15

Condition of the roadways 117

Consumables 52
- Disposal 55
- Safety information for handling battery acid 54
- Safety information for handling oils . . . 52
- Safety information for hydraulic fluid . . 53

Contact details I

Copyright and trademark rights 21

Coupling pin in the counterweight 258

Crane loading 344

Cup holder 63

Curve Speed Control 142

D

Damage 38

Danger area 177

Index

Danger areas of lithium-ion batteries 34
Danger to employees 49
Declaration of conformity 7
Declaring the use of lithium-ion batteries . 32
Decommissioning the truck 345
Defects 38
Definition of directions 24
Description of the truck 2
Dimensions of roadways 114
Display/control unit 64
Main screen 97
Display-operating unit
Messages 267
Disposal
Battery 26
Components 26
Double mini-lever
Lifting/lowering the fork carriage 155, 157
Tilting the lift mast 155, 157
Drive direction
Changing 125
Neutral position 121
Selecting 121
Selecting with the dual pedal version 128
Drive modes
Sprint mode 110
STILL Classic 110
Drive programme
Configuring A/B 119
Selecting 1 to 3 118
Selecting A/B 119
Driver qualification for using lithium-ion batteries 32
Driver rights, duties and rules of behaviour 29
Driver's cab
Use 90
Driver's seat
Adjusting the backrest extension 81
Adjusting the lumbar support 81
Adjusting the seat backrest 79
Adjusting the seat suspension (MSG 65/MSG 75) 80
Adjusting the seat suspension (MSG 75 E) 80
adjustment . . . . . 78 – 79
Switching the seat heater on and off . . 82
Swivelling for reverse travel 82
Drivers 29
Driving
Ascending gradients 189
Descending gradients 189
Driving lights
Switching on and off 102
Driving on loading bridges 192
Driving onto lifts 190
Dynamic Load Control
Automatic mast vertical positioning . 194
Fork wear protection 193
Lift mast tilt angle display 195
Load measurement 196
Overload protection 195
Precision load measurement 198
Reduction of dynamics according to the load weight 193
Speed reduction when the fork carriage is raised 143, 195
Tare function 197
Total load 201

E

EC declaration of conformity in accordance with Machinery Directive 7
Electric parking brake
Emergency actuation 280

Emergencies
Emergency actuation of the electric parking brake 280
Truck tipping over 277
Using the emergency hammer 278
Emergency hammer 278
Emergency lowering 279
Emergency shutdown 276
Emissions 56
Battery 58
Noise emissions 56
Radiation 58
Vibrations 57
Ergonomic dimensions 384

F

Filling the washer system 242
Fingertip switch
Lifting/lowering the fork carriage . . . 161
Tilting the lift mast 161
First-aid measures for working with lithium-ion batteries
Maintenance personnel 299
Fitting attachments 204
FleetManager 239
Shock recognition 239
Fork arms
Length 41
Fork extension 168
Function checking 74
Fuses
Replacing 373

G

General 5

H

Handling gas springs and accumulators . 41
Hazard areas 117
Hazard assessment 32
Hazard warning system
Switching on and off 105
Hazards and countermeasures 46
Heating system 251
Hydraulic blocking function 172
Hydraulic fluid 53
Hydraulic system
Checking for leak tightness 373
Checking the oil level 376
Depressurising 207

I

Illustration of lithium-ion batteries 302
Impermissible use 16
Information for carrying out maintenance 353
Maintenance timeframe 354
Next maintenance interval 354
Information symbols 21
Insulation testing 50
Drive battery test values 51
Test values for the truck 51
Insurance cover on company premises . . 31
Interior lighting 250
Issue date of the operating instructions . . 21

J

Jacking up 351
Joystick 4Plus
Fork-carriage sideshift 163
Lifting/lowering the fork carriage . . . 162
Tilt the lift mast 163

L

Labelling points 10
Lashing down 344
Lift mast
Lubricating the roller track 378
Removing 352
Securing against falling off 352
Securing against tilting backwards . . 352

Index

Lift mast versions 149
Mono lift mast 151
NiHo lift mast 150
Telescopic lift mast 149
Triple mast 150
Lifting 351
Lifting system
Controlling using a double mini-lever 155
Controlling using a quadruple mini-lever 159
Controlling using a triple mini-lever . . 157
Controlling using the joystick 4Plus . 162
Controlling with the fingertip 161
Multi-lever 153
Operating devices 151
Lifting systems
Dynamics 164
Lighting
Meaning of the symbols 101
STILL SafetyLight 107
List of abbreviations 22
Lithium-ion batteries
Battery weight and dimensions 301
Changing the battery type 311
Charging 307
Checking the charge state 305
Danger areas 34
Declaring the use of 32
Display 65
Driver qualification 32
Fire protection measures 300
First-aid measures 299
Hazard assessment 32
Illustration 302
Installing 316
Maintenance personnel 299
Nameplate 15
Permissible batteries 32
Procedure in the event of a fire 32
Product-specific dangers 34
Regulations for storing 303
Safety regulations 299, 301
Special features 31
Transport outside the premises 33
Lithium-ion battery display 65
Load
Driving 183
Picking up 180
Setting down 188
Load capacity 175
Load chains
Cleaning 340
Load measurement
Tare function 197
Load programs 1 to 3
Selecting 165
Lubricating the joints and controls 365

M

Main display 97

Maintaining the heater or air conditioning system . . . 369
Cleaning the fresh-air inlet . . . 369
Replacing the filter mat . . . 369
Maintenance data table . . . 362
Battery . . . 362
Controls/joints . . . 362
Drive axle . . . 363
Electrical system . . . 362
General lubrication points . . . 362
Hydraulic battery carrier . . . 363
Hydraulic system . . . 362
Lift mast . . . 363
Load chains . . . 364
Steering axle . . . 363
Tyres . . . 363
Washer system . . . 364
Maintenance personnel for batteries . . . 353
Maintenance work without special qualifications . . . 353
Malfunctions during lifting mode . . . 171
Malfunctions in the electric parking brake . . . 136
Manual tow coupling
Coupling . . . 258
Uncoupling . . . 259
Medical equipment . . . 40
Messages
about operation . . . 268
about the truck . . . 273
Introduction . . . 267
Mini-console . . . 72
Misuse of safety systems . . . 38
Multi-lever
Lifting/lowering the fork carriage . . . 153
Tilting the lift mast . . . 153

N

Nameplate . . . 13
Nameplate of a lithium-ion battery . . . 15
Neutral position . . . 121

O

Oils . . . 52
Opening/closing the battery door . . . 313
Opening/closing the cab door . . . 249
Opening/closing the side window . . . 250
Operating company . . . 28
Operating devices for hydraulic and driving functions
Double mini-lever . . . 67
Fingertip switch . . . 70
Joystick 4Plus . . . 71
Multi-lever operation . . . 66
Quadruple mini-lever . . . 69
Triple mini-lever . . . 68
Operating materials
Quality and quantity . . . 359
Operating procedures . . . 24
Operating the service brake . . . 129
Operating the signal horn . . . 89
Operational readiness
Trucks for cold store application . . . 378
Ordering spare parts and wearing parts . 359
Overhead guard
Drilling . . . 37
Roof loads . . . 37
Welding . . . 37
Overload protection . . . 195
Overview
Accessories . . . 8
Overviews
Cup holder . . . 63
Display/control unit . . . 64
Driver's compartment . . . 62
Emergency off switch . . . 65
Shelf . . . 63
Truck . . . 60

P

Packaging . . . 26
Parking brake . . . 130
Parking the vehicle safely . . . 138

Index

Parking brake (electric) 132
Actuation when the truck is stationary 133
Functions available while the truck is in motion 135
Malfunctions 136
Symbols on the display-operating unit 133
Parking brake (mechanical)
Applying 130
Parking the truck securely 146
Permissible lithium-ion batteries 32
Personnel qualifications 353
Picking up loads 176
Place of use 17
Precision load measurement 198
Procedure if truck tips over 277
Procedure in the event of a fire when using lithium-ion batteries 32
Product-specific dangers of lithium-ion batteries 34
Production number 14
Prohibition of use by unauthorised persons 30
Proper usage 15

Q

Quadruple mini-lever
Lifting/lowering the fork carriage . . . 159
Tilting the lift mast 159

R

Radio 251
Rear window heating
Switching on and off 242
Reducing speed when turning 142
Regular inspections 50
Regulations for storing lithium-ion batteries 303
Replacing the battery
General information 311
Lithium-ion battery 316
using a hydraulic battery carrier 329
using a lift truck 322
Using a truck 316
Residual dangers 43
Residual risks 43
Retrofitting 35
Reversible fork arms 170
Checking 380
Roadways 114, 117
Ascending gradients 115
Components protruding beyond the truck contour 116
Descending gradients 115
Rotating beacon
Switching on and off 106
Rules for roadways and the working area 117

S

Safety devices 351
Safety inspection 50
Safety regulations for handling lithium-ion batteries 299
Battery weight and dimensions 301
Fire protection measures 300
Maintenance personnel 299
Safety regulations for handling the battery 287
Battery weight and dimensions 289
Damage to cables and battery male connectors 290
Fire protection measures 288
Maintenance personnel 287
Performing battery maintenance . . . 289

Safety regulations for maintenance
General information 350
Safety devices 351
Set values 351
Working on the electrical equipment 350
Working on the hydraulic equipment 350
Safety regulations for working on the lift mast 352
Safety regulations for working with lithium-ion batteries 301
Safety regulations when driving 112
Safety regulations when handing loads . 174
Schematic views 24
Scope of the documentation 19
UPA solutions 20
Seat belt 83
Checking 367
Cleaning 368
Fastening 84
Fastening on a steep slope 85
Maintaining 367
Malfunction due to cold weather conditions 85
Releasing 85
Replacement after an accident 368
Set values 351
Shake function 184
Double mini-lever 186
Fingertip switch 187
Joystick 4Plus 186
Quadruple mini-lever 187
Triple mini-lever 187
Shelf 63
Shock recognition 239
Special risks 44
Speed reduction when the cab door is open 143
Speed restriction
Configuring 144
Switching on and off 144
Sprint mode
Automatic switch off 111
Switching on and off 110
Stability 44
Starting drive mode 124
Dual pedal version 126
Steering 141
Steering axle
Lubricating 372
Servicing 372
Steering system
Checking for correct function 95
Storing the truck 345
StVZO (Road Traffic Licensing Regulations) information 14
Sun blind 256
Sun visor 256
Switching off the truck 146
Switching on
using the key switch 96
via the push button 98

T

Technical data
Dimensions 385
Topicality of the operating instructions . . 21
Total load 201
Tow coupling RO*244 260
Closing 263
Coupling 262
Uncoupling 263
Towed load 257
Towing 282
Procedure 283
Proper use 16
Safety information 282
Trailers
Towing 264
Transport 342
Transporting pallets 178
Transporting suspended loads 179

Index

Transporting the battery by crane
Lead-acid battery 335
Lithium-ion battery 336
Transporting the lithium-ion battery 33
Turn indicators
Switching on and off 104
Tyres
Safety principles 39

U

Unlock the emergency off switch 88
Use after storage or decommissioning . 347
Using working platforms 18

V

Variant
Ceiling sensor 243
Variants
Access authorisation for the fleet manager 100
Access authorisation with PIN code . . 99
Air conditioning 254
Automatic mast vertical positioning 95, 194
Blue-Q 108
Clamp locking mechanism 235
Clipboard 255
FleetManager 239
Fork extension 168
Fork wear protection 193
Heating system 251
Interior lighting 250
Lift mast tilt angle display 195
Lifting systems 149
Load measurement 196
Mono lift mast 151
NiHo lift mast 150
Overload protection 195
Precision load measurement 198
Radio 251
Reduction of dynamics according to the load weight 193
Reversible fork arms 170
Shake function 184
Shock recognition 239
Speed reduction when the fork carriage is raised 143, 195
Speed restriction 144
Sun blind 256
Sun visor 256
Switching on via the push button (variant) 98
Tare function 197
Total load 201
Triple mast 150
Wheel chock 148
Windscreen wipers and washers . . . 239

VDI datasheet
RX20-14C steering turntable 387
RX20-16 steering turntable 391
RX20-16 swing axle 400
RX20-18 and RX20-20 with steering turntable 395
RX20-18 swing axle 404
RX20-20 swing axle 408
View of functions and operating procedures 24
View of operating procedures 24
Views of the display and operating unit . . 25
Visual inspections 74

W

Warning regarding non-original parts . . . 38
Wedging the wheels 343
Wheel chock 148
Wheels and tyres
Checking the condition and wear of the tyres 371
Checking wheel fastenings 372
Maintaining 371
Windscreen wipers and washers
Switching on and off 239
Working at the front of the truck 352
Working on the electrical equipment . . . 350
Working on the hydraulic equipment . . . 350
Working spotlight for reverse travel
Switching on and off 104
Working spotlights
Switching on and off 103

STILL GmbH

56368011501 EN – 04/2019 - 05